Fire Research Note

No. 675

EXTENSION OF INSULATION AT BOUNDARIES OF SHIP'S BULKHEADS

by

MARGARET LAW

September, 1967.

FIRE
RESEARCH
STATION

F.R. Note No. 675
September, 1967.

EXTENSION OF INSULATION AT BOUNDARIES OF SHIP'S BULKHEADS

by

Margaret Law

Summary.

The basis of the present requirements for extension of insulation at the boundaries of ships bulkheads with decks, 15 ins. for steel and 18 ins. for aluminium, is examined and it is concluded that there is little justification for altering these values. The method of calculation and the results of an experiment are given.

MINISTRY OF TECHNOLOGY AND FIRE OFFICES' COMMITTEE
JOINT FIRE RESEARCH ORGANIZATION

EXTENSION OF INSULATION AT BOUNDARIES OF SHIPS' BULKHEADS

by

Margaret Law

1. Introduction

Insulation on a ship's bulkhead is normally extended beyond the boundaries and along the deck for a short distance, the intention being to prevent too much heat being conducted to combustible materials on the side remote from the fire. For steel the minimum extension required is 15 in. (38 cm) and for aluminium 18 in. (46 cm), the fire resistance being 1 hour. This note examines the heat flow and considers whether any change in the requirements is justified.

In the following calculations the bulkheads are assumed to be thin so that the temperature may be taken as constant over their thickness. The maximum permissible temperature rise on the surface freely cooling to the air is taken as 139 deg C, which is the criterion specified in British Standard 476

Some temperature measurements on a steel shelf fixed to a 3 ft. (90 cm) square bulkhead heated by the small scale fire resistance furnace are given as a check of the calculations.

2. General case

Consider a rectangular fin of thickness D with the edge $x = 0$ maintained at temperature V. There is cooling by radiation and convection from the surfaces $y = \frac{1}{2}D$, $y = -\frac{1}{2}D$, and no cooling from the edges. (see Fig. 1) For the elemental volume of unit width, bounded by the sections x and x + dx the equation is

$$KD \frac{d^2v}{dx^2} - 2H\,v = 0 \qquad (1)$$

where K is the thermal conductivity

v is the temperature rise

H is the cooling coefficient

For a fin of length l and the boundary conditions

$$x = 0 \quad , \quad v = V$$

$$x = l \quad , \quad \frac{dv}{dx} = 0 \text{ (i.e. no cooling from the end)}$$

the solution of (1) is

$$v = V \frac{\cosh \mu(l-x)}{\cosh \mu l} \qquad (2)$$

where $\mu = \sqrt{\frac{2H}{KD}}$ (denoted as μ_2)

For cooling from one surface

$$\mu = \sqrt{\frac{H}{KD}} \quad \text{(denoted as } \mu_1\text{)}$$

i.e. $\mu_1 = \frac{\mu_2}{\sqrt{2}}$

For infinite l equation (2) becomes

$$v = Ve^{-\mu x} \qquad (3)$$

The constant values used in the calculations are given below.

	Steel	Aluminium
D cm	0.635	0.635
H cal $cm^{-2} s^{-1}$ deg C^{-1}	0.5×10^{-3}	0.5×10^{-3}
K cal $cm^{-1} s^{-1}$ deg C^{-1}	0.12	0.48
μ_1	0.081	0.040

Note: H varies with temperature rise and with orientation of the surface; a mean value has been chosen which is sufficiently accurate for these calculations.

3. Calculations

3.1 Bulkheads insulated on both faces.

One situation is illustrated in Fig. 2a. The problem is to chose a value "d" such that heat conducted along the deck from point P does not raise the temperature v at point R by more than 139 deg C. The situation can be idealised to an infinite plate, insulated on one face over a length "2d." The heat loss by conduction down the insulated bulkhead is then neglected but so is the heat input from the fire through the insulation between points P and Q. See Fig. 2b.

One approximation to the situation in Fig. 2b is to put $l = 2d$, $x = d$, so that equation (2) becomes

$$v = V \frac{\cosh \mu_1 d}{\cosh 2\mu_1 d} \qquad (4)$$

Another approximation is to put $l = \infty$, $x = d$ so that equation (3) becomes

$$v = Ve^{-\mu_1 d} \qquad (5)$$

The value of v is required to be 139 deg C and V is taken as the furnace temperature at 1 hr, approximately 930 deg C. (The value of 930 tends to overestimate the hazard.)

Both equations (4) and (5) give

d = 24 cm for steel

d = 47 cm for aluminium

Equation (4) neglects heat loss by conduction and radiation from the uninsulated part of the deck which extends beyond the point S and therefore it tends to overestimate "d". Equation (5) neglects only heat loss by radiation from the lower surface beyond point S. However, since both equations give the same answer it is clear that the end effect is negligible.

3.2. Bulkhead insulated on one face

A situation applicable to steel bulkheads only is illustrated in Fig. 3a. A value of d must be chosen such that heat from points P and T (both at 930 deg.C) does not raise the temperature of Q by more than 139 deg C. Heat flows by conduction from point P to point Q, by radiation from the surface and conduction in the direction TQ and by radiation from the surfaces and conduction in the directions QR and QS. Since end effects are negligible we can assume that cooling from QS is the same as from QR and the total rate of heat loss q, from point Q, is then given by integrating equation (3) with $\mu = \mu_1$,

$$\text{i.e.} \quad q = 2x \int_0^\infty H v \, dx$$

$$= 2HV \int_0^\infty e^{-\mu_1 x} dx$$

$$q = \frac{2HV}{\mu_1}$$

Here V is the temperature of point Q, required to be 139 deg C.

$$\text{i.e.} \quad q = \frac{2H \times 139}{\mu_1} \qquad (6)$$

The heat flow by conduction from point P at 930 deg C to point Q at 139 deg C is given by

$$q_1 = \frac{KD\,(930-139)}{d} \qquad (7)$$

By putting the boundary conditions

$$x = 0\,,\ v = V$$
$$x = d\,,\ v = 139$$

we obtain from equation (1)

$$v = \frac{139 \sinh \mu x + V \sinh \mu (d-x)}{\sinh \mu d}$$

and at $x = d$

$$\frac{dv}{dx} = \frac{139 \mu \cosh \mu d - V\mu}{\sinh \mu d}$$

The rate of heat flow at Q from TQ is given by

$$q_2 = -KD \frac{dv}{dx} = \frac{KD\,\mu_1}{\sinh \mu_1 d}\,(930-139 \cosh \mu_1 d) \qquad (8)$$

where point T is at 930 deg C.

Since $q = q_1 + q_2$

by combining equations (6) (7) and (8) we obtain

$$\frac{2H \times 139}{\mu_1} = \frac{KD}{d} \times 791 + \frac{KD\,\mu_1}{\sinh \mu_1 d}\,(930 - 139 \cosh \mu_1 d) \qquad (9)$$

Equation (9) is satisfied by $d = 33$ cm (13 in) for steel.

In this calculation the heat input through the insulation to the steel is neglected, which tends to underestimate the hazard; this is compensated for in part by the use of $V = 930$ deg C.

4. Temperature measurements

A 0.635 cm ($\frac{1}{4}$ in) thick steel bulkhead 90 cm (36 in) square insulated on the unexposed face, was heated by the small scale fire resistance furnace, see Fig. 4 A steel shelf 0.32 cm ($\frac{1}{8}$ in) thick was fixed to the top of the bulkhead, good contact being ensured by welding, and temperatures were measured at different distances, x, from the heated end. Two values of furnace temperature rise, 800 and 1000 deg C, were used, the steel temperatures being taken when steady conditions were reached. The temperature rises of the unexposed face of the bulkhead, 195 and 320 deg C respectively, meant that there was little if any cooling of the

underside of the shelf and the assumed situation is shown in Fig.4b. Values of $\frac{v}{V}$ are plotted in Fig. 5 together with the solution of equation (3) using $D = 0.32$ cm and $\mu = \mu_1$ i.e. cooling from the upper face only with the value of 1 large enough for equation (3) to be valid. The agreement of the experimental points with the line confirms the basic equations used in the calculations.

5. Discussion

The calculated extensions for bulkheads insulated on both faces are 24 cm (10 in) for steel and 48 cm (19 in) for aluminium as against the present requirements of 38 and 46 cm (15 and 18 in) respectively. These calculations suggest that the values for aluminium should be twice those for steel, but in practice a much greater thickness of insulation is used on aluminium, since it must be kept cooler than steel, and there is thus less heat transmission to the metal through the insulation. Since this latter heat transmission is neglected in the calculations the value for aluminium is likely to be more valid. The calculated extension on the uninsulated face of a steel bulkhead is 33 cm (13 in) which is a little less than the required 38 cm (15 in). There appears to be little justification therefore for any change in the present requirements for either steel or aluminium.

6. Conclusions

The calculations indicate that there is little justification for altering the present requirements for extension of insulation at the boundaries of ships bulkheads with decks.

Temperature measurements of a steel shelf, fixed to a steel bulkhead exposed in the small scale fire resistance furnace, confirm the basis of the calculations.

Acknowledgement

Mr. T.B. Chitty provided the experimental measurements.

Reference

Fire tests on building materials and structures British Standard 476: Part 1: 1953.

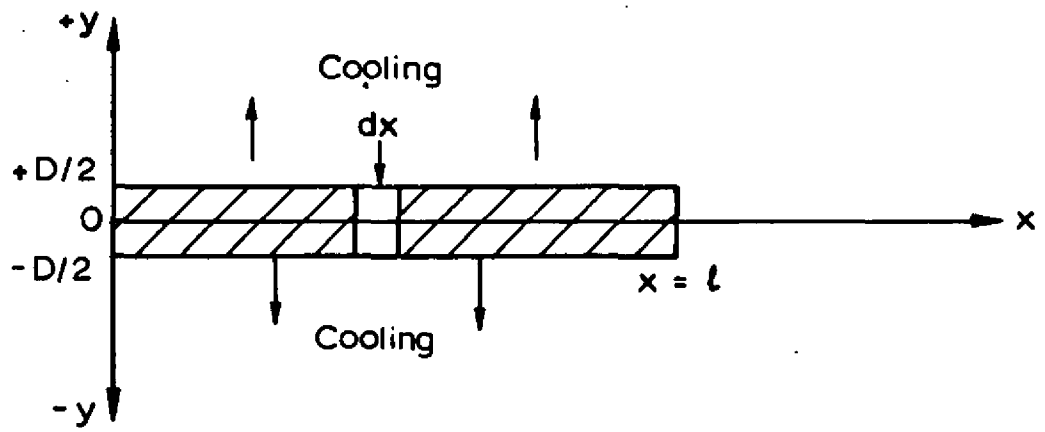

FIG. 1. RECTANGULAR FIN

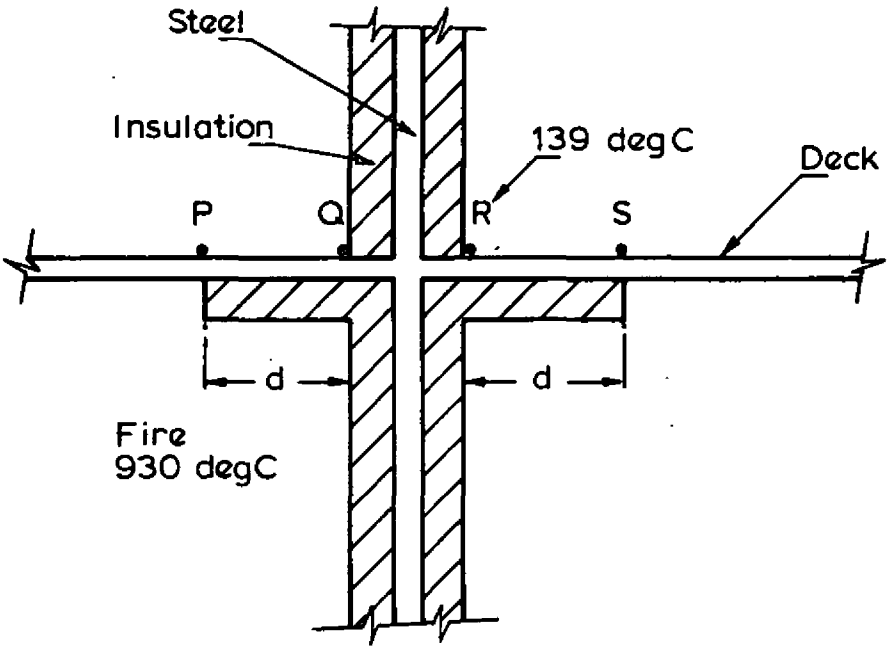

(a) ACTUAL SITUATION

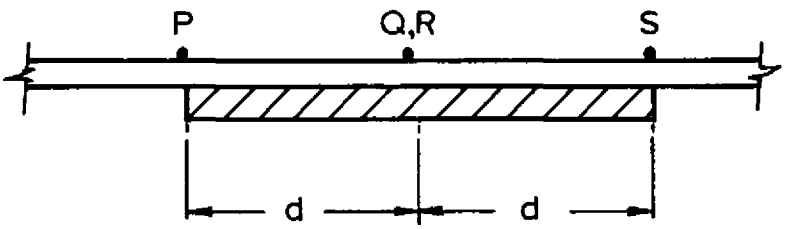

(b) ASSUMED SITUATION

FIG. 2. BULKHEAD INSULATED ON BOTH FACES

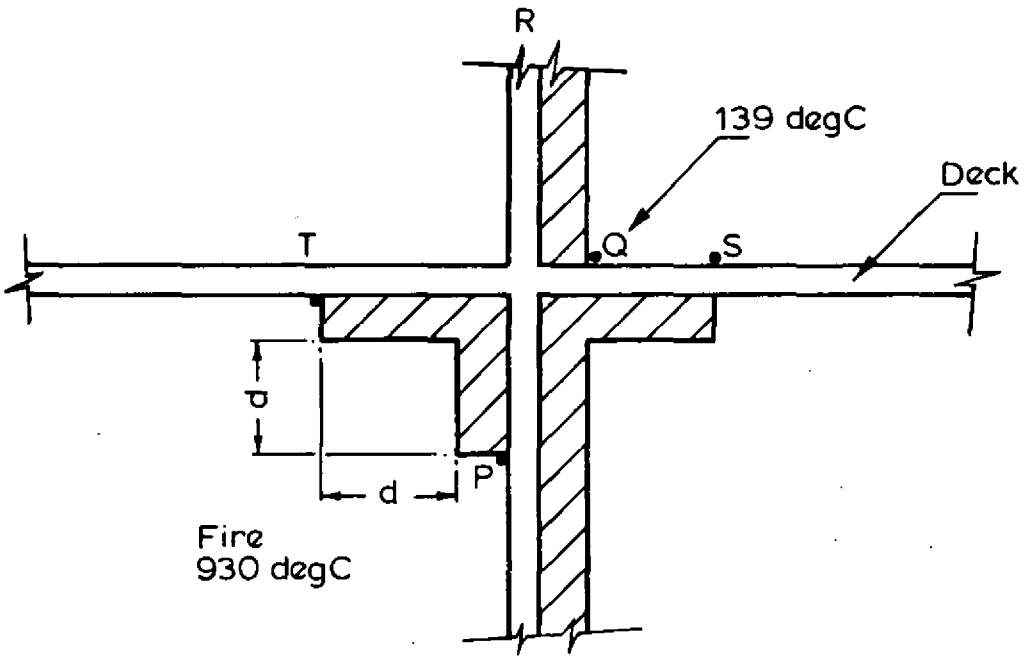

(a) ACTUAL SITUATION

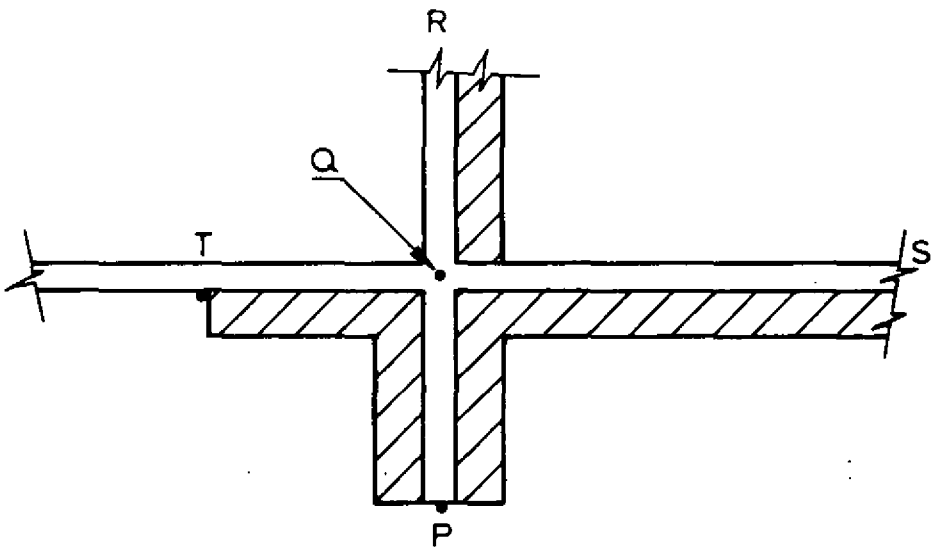

(b) ASSUMED SITUATION

FIG. 3. BULKHEAD INSULATED ON ONE FACE

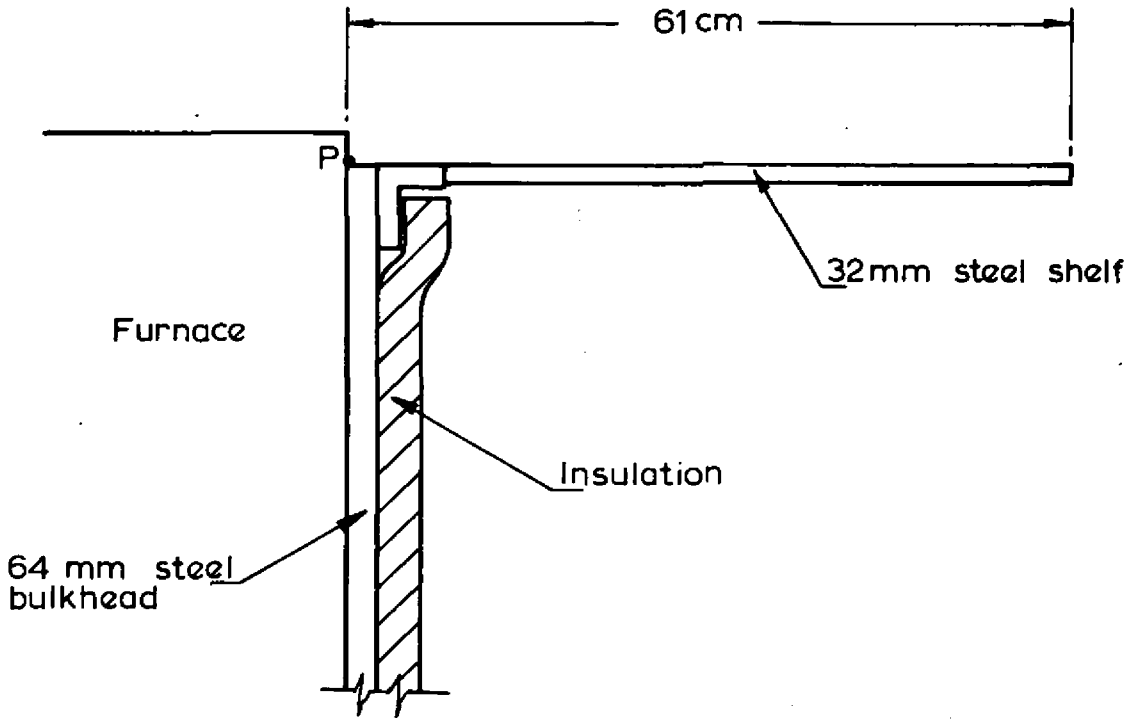

(a) Actual situation

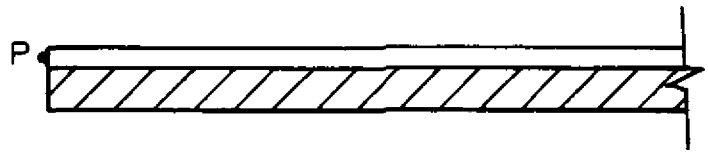

(b) Assumed situation

FIG. 4. SHELF ON BULKHEAD

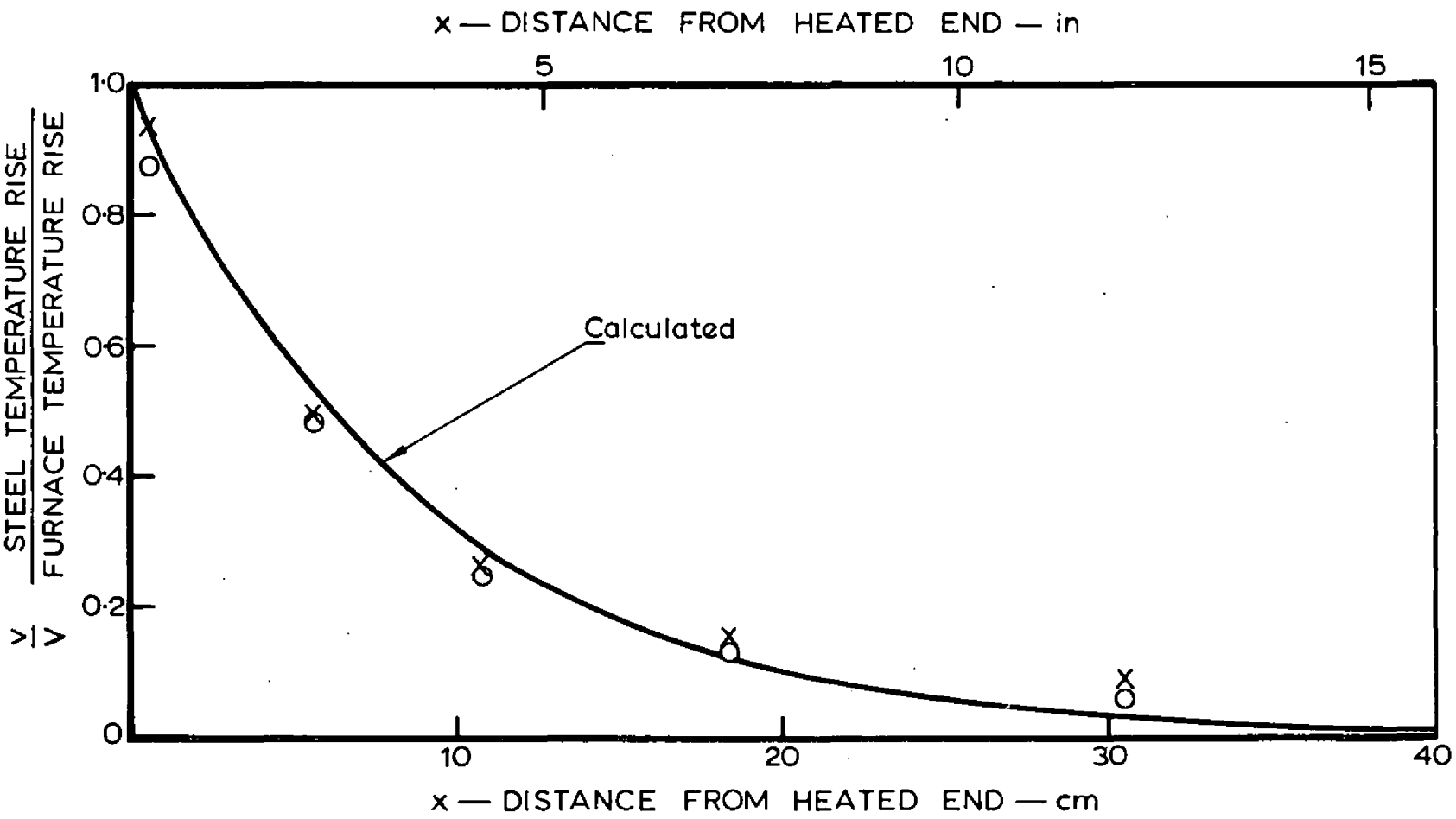

Measured values O — Furnace temperature rise = 800 degC
X — Furnace temperature rise = 1000 degC

FIG. 5. MEASURED AND CALCULATED TEMPERATURE DISTRIBUTION ON SHELF