DEPARTMENT OF SCIENTIFIC AND INDUSTRIAL RESEARCH AND FIRE OFFICES' COMMITTEE
JOINT FIRESEARCH ORGANIZATION

AN APPARATUS FOR MEASURING THE VELOCITY OF DROPS IN A WATER SPRAY

by

D. J. Rasbash and G. W. V. Stark

Summary

A description is given of an apparatus, based on a direct sampling technique, for measuring the velocities of falling drops in sprays. The results obtained for drops of different mean diameters in a single spray are given. The apparatus gives satisfactory results for drops of mean diameter 0·200 mm or more, provided a sufficient number of drops are captured in a sample and a sufficient number of samples are collected.

The theory of the apparatus is presented, and experimental errors and the reasons for deviations from true drop velocity are discussed.

August, 1955.

File No.

Fire Research Station,
Boreham Wood,
Herts,.

An apparatus for measuring the velocity of drops in a spray

by

D. J. Rasbash and G. W. V. Stark

Contents

Symbols

D = mean distance of captured drops of given size from leading edge of tray
d = length of tray
h = height of cover above tray
l = length

Symbols (cont'd)

N = number of drops of given diameter in unit volume

n = number of a segment, measured from leading edge of tray

Q = cumulative proportion of drops in first n segments

q = proportion of drops in n-th segment

V = velocity of drops

v = velocity of sample tray

x = number of equal parallel strips in length of slide

y = height of a drop above sample tray

σ = standard (root mean square) deviation

θ = angle

AN APPARATUS FOR MEASURING THE VELOCITY OF DROPS IN A SPRAY

by

D. J. Rasbash and G. W. V. Stark

Introduction

In a study of the extinction of liquid fuel fires by water sprays(1), in which the spray was projected downwards on to the fire, the calculation of heat transfer to the drops comprising the spray required a knowledge of the velocity of approach of the drops to the fire. The method of measuring the velocities of drops described in the present note was therefore developed. The mechanical apparatus was simple, and the velocities of drops of a given mean diameter were calculated from their mean position when captured on a slide.

Another method was reported (2) shortly after starting this programme, in which the velocities of individual drops were obtained from a photograph of the drops in motion illuminated by two discreet high intensity flashes, of very short duration, separated by a short interval of time. This method, however, required costly and elaborate electronic apparatus, and also had the disadvantage that the photographs obtained contained images of drops that were out of focus, which led to difficulties in measuring their size. The measurement of the position of drops on slides obtained with the apparatus described herein were made from contact prints, in which the definition of the images of drops, in the range of sizes measured, was uniform.

Experimental

Principle of apparatus

The principle of the apparatus is illustrated in Figure 1. Drops, falling vertically, pass through an orifice U P (Figure 1a). A cover AB, and sample tray DC, whose leading edges are in a vertical plane at right angles to the direction of motion, are projected horizontally at a constant velocity across the spray falling through the orifice, so as to come to rest immediately when reaching the vertical wall, UW. The drops captured between the cover and the sample tray (Figures 1b and 1c) will fall on to the tray, their position being a function only of the velocity of the drops, V, the velocity of the cover and sample tray, v, and the dimensions of the tray and cover.

Apparatus

The construction of the drop sampling apparatus is shown in Figures 2 and 3. The apparatus consisted of an open-ended rectangular body with the two sides extended, A, to which was attached a tubular sleeve, B, into which the operating rod and control spring C were fitted. The sample tray holder D fitted to the end of the operating rod and could be drawn back into the open-ended body, A, in which position the spring-loaded trigger, E, engaged in a notch in the operating rod (Figure 3). The close-fitting cover, F, was provided with an orifice 4 cm square. The sample tray, G, was made from a piece of thin plate glass, 5 cm square on which was stuck a 16 B.S.G. metal wall, 0·4 cm high. The tray was a close fit in the sample holder, and was mounted so that drops were caught at h = 3 cm below the sample tray cover, J. A square of d = 4 cm side was engraved on the bottom of the glass so that, when the trigger was released and the sample holder projected to its foremost position, the engraved square was vertically beneath the orifice in the cover. The sample tray cover J sloped so as to form a trough of maximum depth 0·6 cm, to retain drops striking it during the operation of the apparatus. The back of the sample tray holder was left open to reduce induced turbulence to a minimum. Those parts of the apparatus liable in operation to splash droplets of water on to the sample tray were lined with water absorbent material.

Operation of apparatus. 4 ml of castor oil were put into the sample tray, G, which was then placed in the sample tray holder, D, care being taken to keep the sample tray and apparatus level in this and all subsequent operations. The cover F was then fitted after setting the trigger (Figure 3) and the apparatus inserted into the spray at the sampling point selected. The trigger E was then operated, after which the apparatus was removed from the spray. The cover F was then removed and the sample tray withdrawn, and a contact print taken of the sample on a lantern-slide plate.

Velocity of traverse of tray. The velocity of traverse, v, of the sample tray was measured by placing a smoke-blackened microscope slide on the flat portion of the operating handle, H, and using a tuning fork of known frequency, with a light scribing needle attached to produce a calibration trace on the blackened slide when the trigger E was operated. From this trace, the velocity of traverse was calculated.

Some variations in the velocity of traverse so obtained were observed, but the correlation coefficient of results obtained over a period of two years indicated that the variations were random, and so all the values of traverse velocity obtained were pooled to determine a mean value, v = 152·4 cm/sec, which was used in all calculations of the velocity of drops.

The variation of velocity of traverse with distance traversed was small and was therefore neglected.

Drop counting and size classification. An enlarged image, magnification (x 15) of the contact print of the sample, an example of which is shown in Plate 1, was projected on to a vertical screen 60 cm x 60 cm, ruled into twelve equal horizontal strips. The image of the leading edge and one of the sides of the 4 cm square etched on the sample tray were made to coincide with the upper boundary and one side of the screen; the strips on the screen ran parallel to the image of the leading edge of the tray. The drops were then counted and classified in size groups at 1 mm intervals, starting with the group 1·5-2·5 mm magnified diameter, i.e. true mean diameter 0·133 mm. A graticule, on which the limiting sizes of drop images were reproduced, was used in the classification of the images. Sizes smaller than 1·5 mm diameter were not counted, as they were of the same order of size as imperfections found on the lantern slides. The numbers of drops of a given size group in successive strips were used to calculate the mean displacement, D, from the leading edge of the slide.

Spray tested

The water sprays tested were used in the course of an investigation on the extinction of kerosine fires (1). They were projected downwards from a pair of batteries of impinging jet nozzles, symmetrically arranged 175 cm above the rim of the combustion vessel. The spray sampling apparatus was erected on a rigid framework 30 cm above the rim of the combustion vessel, in such a position that samples of spray were collected on the vertical axis of the vessel.

A series of 16 water sprays, from impinging jet nozzles (3/64 in bore) was sampled. The sprays were generated with pressures ranging from 5 to 85 lb/in.^{2} and at rates of flow at the combustion vessel ranging from 0·4 to 1·2 g.cm^{-2} min^{-1}.

For the purpose of the present note, the results obtained with one of these sprays will be given. The spray selected had the following properties:-

Nozzle pressure	30 lb/in.^{2}
Rate of flow at combustion vessel	0·4 g cm^{-2}min^{-1}
Mass median drop size of spray	0·35 mm
Velocity of air carried downward with spray at sampling point ("Entrained air velocity")	139 cm/s

Nine samples of this spray were collected, and the drops captured were classified for position and mean diameters; from these results the mean displacement for each mean diameter was calculated. (Table 1)

Calculation of drop velocity and distribution. It was assumed, in the calculation of drop velocity and distribution that the drops in each size group had the same velocity and were uniformly distributed and randomly dispersed in the spray, i.e., that there was an equal probability that drops of that size would occupy any position in the spray; and also that the spray fell vertically through the apparatus. The development of equations relating the velocity of drops falling randomly at the same velocity to their mean position on a sample tray, and of the distribution of these drops over a series of equal parallel strips on the sample tray, is given in Appendix I. The equations relating velocity of drops to mean displacement are:-

For drop velocity $V \geqslant v\frac{h}{d}$

$$D = \frac{hv}{6V}\left(3 - \frac{hv}{dV}\right) \quad \ldots\ldots (3)$$

For drop velocity $V \leqslant v\frac{h}{d}$

$$D = \frac{d}{6}\left(3 - \frac{V}{v}\frac{d}{h}\right) \quad \ldots\ldots (4)$$

The proportion Q of drops in the nth strip of x strips of equal width parallel to the leading edge of the slide is given by

$$Q = \frac{1}{xh}\left[\left(x - \overline{n-1}\right)\frac{d}{x}\frac{V}{v} + h - \frac{hdV}{xv}\right] \quad \ldots\ldots (6)$$

(N.B. List of symbols given at beginning of text).

Substituting the values for the apparatus,

$v = 152{\cdot}4$ cm
$d = 4$ cm
$h = 3$ cm
$x = 12$

the equations become, for drop velocities $V \geqslant 114{\cdot}3$ cm :-

$$D = \frac{228{\cdot}6}{V}\left(1 - \frac{38{\cdot}1}{V}\right) \text{ cm} \quad \ldots\ldots (3a)$$

And for drop velocities $V \leqslant 114{\cdot}3$ cm/s

$$D = 2\left(1 - \frac{V}{342{\cdot}9}\right) \text{ cm} \quad \ldots\ldots (4a)$$

the fraction in the nth segment being given by

$$Q = \frac{1}{108}\left[(13 - 2n)\frac{V}{v} + 9\right] \quad \ldots\ldots (6a)$$

The curve constructed from equations (3a) and (4a) relating velocity of drops and mean displacement from the leading edge of the sample tray is given in Figure 4. The proportion of drops with velocity V falling in successive segments, measuring from the leading edge of the tray, calculated from equation (6a) for different ratios $\frac{V}{v}$, is given in

TABLE 1

THE DISTRIBUTION AND VELOCITY OF DROPS IN A SPRAY

Segment		Mean drop Diameter mm															
		0·133		0·200		0·267		0·333		0·400		0·467		0·533		0·600	
No.	Mean displacement (cm)	Experiment	Calculated	Experiment	Calculated	Experiment	Calculated	Experiment	Calculated	Experiment	Calculated	Experiment	Calculated	Experiment	Calculated	Experiment	Calculated
1	0·167	768	728·0	354	341·3	187	184·6	87	82·8	32	33·6	7	13·2	6	8·2	4	3·7
2	0·500	687	651·9	309	301·2	165	161·2	79	71·7	33	28·1	15	9·5	2	1·5	0	0·6
3	0·833	632	574·8	293	259·0	133	137·6	53	58·1	15	16·1	5	4·2	2	0·2	1	0·5
4	1·167	534	496·6	190	217·1	107	98·5	21	32·0	2	3·7	4	3·2	0	0·1	0	0·2
5	1·500	339	420·6	94	141·5	31	44·8	6	2·4	0	0·5	0	1·9	0	0	0	0
6	1·833	215	342·6	52	56·2	9	12·1	0	0	0	0	2	0·8	0	0	0	0
7	2·167	141	233·9	20	27·6	5	2·2	0	0	0	0	0	0·2	0	0	0	0
8	2·500	80	97·8	11	10·3	3	0	0	0	0	0	0	0	0	0	0	0
9	2·833	75	48·9	12	4·8	0	0	0	0	0	0	0	0	0	0	0	0
10	3·167	63	16·5	13	0	0	0	0	0	0	0	0	0	0	0	0	0
11	3·500	43	4·3	4	0	0	0	0	0	0	0	0	0	0	0	0	0
12	3·833	41	2·1	7	0	1	0	1	0	0	0	0	0	0	0	0	0
Total No. of drops		3618		1359		641		247		82		33		10		5	
Mean displacement,		1·044	3618	0·811	1359	0·678	641	0·550	247	0·447	82	0·642	33	0·233	10	0·300	5
Velocity cm/s		171				294		372		472		312		945		729	

Figure 5. Thus, from the mean position of drops of a given size on a sample tray, a velocity, the "equivalent vertical velocity," may be read off from Figure 4, and from this velocity, the theoretical distribution of drops in the segments of the slide may be found from Figure 5.

Results

The results for the sum of the nine slides are given in Table 1. This table shows the distribution of the drops of the different sizes between the segments on the slides, the mean displacement of drops calculated from this distribution, the mean velocity of the drops read off from Figure 4 and the resulting theoretical distribution of drops obtained from Figure 5. The results for the individual slides are given in Appendix II.

The cumulative distributions for drop sizes 0·133 to 0 400 mm from the experimental results given in Table 1 are shown in Figure 6, together with 95 per cent confidence limits calculated by the method given by Kolmogoroff (3). The cumulative distribution curves from the theoretical frequencies are also shown. It will be noted that the deviation of the experimental from the theoretical distribution is considerable only for the smallest drop size, 0·133 mm; and for drop sizes larger than 0·133 mm, the theoretical distribution is contained within the 95 per cent confidence limit band.

X^2 tests between those experimental and theoretical distributions for those individual slides, (Appendix II), in which a sufficient number of drops were caught, indicated that the distributions obtained with the smallest drop size were not the same as the theoretical distributions; however, except in a few cases, with the larger drop sizes the distributions were not significantly dissimilar.

In Figure 7 are plotted three curves of drop velocity, Curve 1 is plotted from data from Table 1, and Curve 2 from the mean of nine separate velocity determinations, Appendix II; to obtain a better estimate of the velocity of drops in the spray, a correction may be applied for the deceleration of drops in the sampling apparatus, and Curve 3 shows this correction applied to Curve 1. The 95 per cent confidence limits for points on Curve 2 are also indicated in Figure 7, and it is reasonable to expect they would not be appreciably different for Curve 1, or Curve 3. The difference between Curves 1 and 2 is discussed later.

The line for the entrained air velocity, Curve A, and the curve for the sum of the terminal velocity of water drops falling in still air and entrained air velocity, Curve B, are also plotted in Figure 7.

Discussion

It is reasonable to expect that the mean velocity curve for drops produced by impinging jet batteries would lie between (a) the sum of the terminal velocity of the drops and the entrained air velocity, and (b) the velocity of the water jet from the nozzles (for the spray reported herein, 1750 cm/s), and that the velocity should reduce to the entrained air velocity at zero drop size. Curve 3, Figure 7, shows that this does occur. The large deviations in the velocities of a given drop size and the errors associated with this method of drop velocity measurement are discussed below.

Errors associated with the apparatus

It was estimated that the construction of the apparatus would introduce maximum errors of ± 2 per cent at 200 cm/s and ± 3 per cent at 700 cm/s. Actual errors in the use of the apparatus are likely to have been less and also biased in one direction, since for each group of tests on a given spray, one sample tray was used. These deviations are small and would contribute little to the observed deviations. The trough formed

in the sample tray cover would not interfere with drops whose velocity was greater than 20 cm/s and the wall of the sample tray itself would not interfere with drops whose velocity was greater than 60 cm/s. These velocities are less than the entrained air velocity alone, and it is therefore unlikely that either the trough in the sample tray cover, or the wall of the sample tray interfered with any drops.

Validity of assumptions

The assumptions made in applying equations (3), (4) and (6) to an actual spray are :-

(a) that drops of a given mean diameter are uniformly distributed and randomly dispersed in the sampled volume, i.e. there is an equal probability that drops will occupy any position in the volume,

(b) that drops fall vertically downwards, and

(c) that drops of a given mean diameter have a unique velocity.

To examine the effects of major deviations from these assumptions on the distribution of drops, five specific examples representing five types of deviation were investigated, as follows :-

(1) the drops fall only through the central one-third portion of the fixed volume,

(2) the drops fall only through the outer two-thirds portion of the fixed volume,

(3) the drops fall at an angle of 20° to the vertical in the direction of motion of the slide,

(4) the drops fall at an angle of 20° to the vertical in a direction opposite to the motion of the slide,

(5) one-third of the drops each fall at velocities respectively 0·5, 1·0 and 1·5 times the mean velocity of the drops.

Deviations (1) and (2) represent divergences, wider than would be expected, from a random distribution; (3) and (4) represent divergences from a vertical direction of fall, and (5) represents a divergence from a uniform velocity of fall, of drops of a given diameter.

The distribution of drops on the slide that would be obtained with the above deviations were computed for the case where the velocity of the drops equals the velocity of the slides (152 cm/s) and are shown in Figure 8. The distributions for deviations 1 to 4 above were obtained by a geometrical method given in Appendix III. For deviation 5 the expected distributions for the individual velocities were obtained from Figure 5 and summed. From each of these distributions a mean displacement of drops was calculated and a velocity, called hereinafter the equivalent vertical velocity, was obtained from Figure 4. These velocities were respectively 97, 175, 235, 41, 142 cm/s for deviations 1, 2, 3, 4 and 5 above. It will be seen that, except for deviation 5, there were considerable differences between the estimated equivalent vertical velocity and the actual velocity of the drops (152 cm/s). However, from Figure 5 "expected" distributions may be obtained from the equivalent vertical velocity and these are compared in Figure 8 with the actual distributions of the drops that would be obtained.

Deviations 1, 2, and 4 give distributions that are substantially different. Thus it would be expected, that any major deviation of type 1, 2 or 4 above would show a significant difference between the drop distribution on the slide predicted by Figure 5 and the actual distribution. The general lack of significant differences, between the predicted distributions and those obtained, for drop sizes of 0·200 mm and larger

may, therefore, be taken as evidence that major deviations of types 1, 2 and 4 from the assumptions did not occur. Moreover, since a deviation of type 3 would be as probable as a deviation of type 4 it may be expected that the former type of deviation did not exert any major disturbing influence either. It is noteworthy too that similar deviations of types 3 and 4 bring about opposite and approximately equal errors in the value of the estimated velocity of the drops; the mean velocity as estimated from a number of slides would not therefore be seriously in error if these deviations were equally probable.

The smallest drop size showed highly significant deviations between actual and predicted distributions. The reason for this is probably that these fine drops were subject more readily to deviations in direction of motion by turbulence in the entrained air stream, by turbulence caused by the motion of the slide and cover, and particularly, by the deflection of the entrained air stream trapped in the sampling apparatus.

Effect of deflection of entrained air stream

The entrained air stream trapped with the spray in the sampler would be deflected from its downward path. This would cause a deviation from assumption (b) above. If it is assumed that the air stream, when deflected horizontally, maintained its velocity, 139 cm/s the horizontal velocities imparted to the 0·133 mm and 0·200 mm drops would be 47 cm/s and 18 cm/s respectively; the displacements caused by these transverse velocities would be one or two segments, and less than half a segment respectively. For drops of larger diameter the deflection would be progressively less.

Such deflections, which are only appreciable for the finest drops, may occur towards either the leading or trailing edge of the sample tray. It is noteworthy that, for the finest drops, approximately equal numbers of drops in excess of the theoretical distribution have been captured in the first four and the last four positions on the slides (Table 1).

The effect of turbulence of the entrained air stream

The method of generation of spray by impinging jet batteries induces turbulence of the entrained air in the spray cloud. Corrsin and Uberoi (5) found that the root mean square deviation in velocity of the air stream on the axis of a jet discharging air into still air at distances that were large (20 x) compared with the diameter of the jet was about 22 per cent of the mean axial velocity. The root mean square deviation decreased slowly with increasing distance from the jet, and increased with increasing density of the fluid discharged from the jet. Although it was not possible to assign an equivalent jet diameter to the array of impinging jets used to generate the water spray in the present experiments, and Corrsin and Uberoi did not give results for water sprays discharging in air, the above figures may be taken to represent the order of deviation of velocity in the entrained air stream of the spray. The percentage root mean square deviations of velocity for drops of mean diameters 0·200, 0·266, 0·333 and 0·400 mean, were 20, 19, 18, and 27 per cent respectively were in reasonable accord with the above figure. Thus it may well be that the deviations in velocity found in the present experiments are at least in part due to turbulence in the spray cloud.

The effect of size of sample

The 95 per cent confidence limits for drops larger than 0·400 mm Figure 6 show that these results were not reliable as estimates of the velocity of the drops, the limits increasing from ± 35 per cent of the mean velocity for 0·467 mm, to ± 75 per cent for 0·600 mm mean diameter drops. The number of drops for drops sizes larger than 0·400 mm was small, the maximum number on any one slide being 8.

It can be shown that the standard deviation of a distribution that is uniform and random, i.e. in which the probability of equal numbers occurring in $\frac{1}{2}$ segments either side of the mean is the same for each segment, is given by $\sigma^2 = \frac{\ell^2}{12}$, when σ is the standard deviation (4) It has been assumed in the method for calculating drop velocities that the distribution of drops in the spray cloud is uniform and random, and, although the distribution of drops of a given size is no longer random when they have been captured on a slide, this equation has been used to give an indication of the standard error of the mean velocity to be expected for a given number of captured drops. Table 2 which gives the 95 per cent confidence limits for different mean positions of the velocities determined for different numbers of drops caught on a single sample tray, shows the effect of the number of drops captured on the error in velocity determination. The difference between these limits for means of velocities for a given drop size from more than one sample will be reduced approximately as the inverse square root of the number of samples. By taking moments on equation 6, a more accurate expression for the variances of velocities up to $V = \nu \frac{h}{d}$ may be obtained:

$$\sigma^2 = \frac{d^2}{12} - \frac{d^4 V^2}{36 h^2 \nu^2} \qquad \ldots\ldots (8)$$

The application of this equation indicates that the variance is in fact above 30 per cent larger than that predicted by the simple expression, and hence the confidence limits in Table 2 are a conservative estimate.

TABLE 2

CONFIDENCE LIMITS FOR VELOCITY OF DROPS, DETERMINED FROM A SINGLE SAMPLE

Mean displacement of drops on slide cm	Calculated drop velocity cm/s	95 per cent confidence limits for velocity				
		Number of drops captured				
		4	9	25	49	100
2·00	0	0–1350	0–155	0–80	0–55	0–40
1·83	28	0–1350	0–175	0–103	0–79	0–63
1·67	55	0–1350	0–200	0–124	10–103	24–88
1·50	84	0–1350	0–230	25–152	42–126	54–114
1·33	110	0–1350	7–265	59–177	76–155	86–141
1·17	143	0–1350	54–305	94–210	108–187	119–174
1·00	178	14–1350	94–362	130–252	144–228	154–213
0·83	230	71–1350	138–440	174–313	190–282	199–262
0·67	300	125–1350	190–576	230–405	248–363	260–340
0·50	414	190–1350	270–780	320–558	245–505	364–470
0·33	645	310–1350	430–1175	510–845	550–765	575–723
0·17	1350	670–1350	890–1350	1060–1350	1125–1350	1180–1350

Note. The apparatus imposes limits of 0, and 1350 cm/s on calculated velocities.

Thus, nineteen times out of twenty, for samples of nine drops of a given mean diameter on each of nine sample trays, and for the range of velocities found in the present experiments, the mean velocity can be expected to lie within ± 20 per cent of the actual drop velocity, and, to reduce the limits to ± 10 per cent, at least thirty drops must be captured on each tray. The limits for samples of less than nine drops increase very rapidly.

Therefore the velocities calculated for drops greater than 0·400 mm diameter, where in general few drops were captured, are not considered to be reliable estimates. Moreover, since the composition of the spray is such that the number of drops in a given volume decreases very rapidly with increasing drop diameter, the use of a sampling apparatus designed to capture sufficient drops larger than 0·400 mm to give a reasonable estimate of their velocity would result in the capture of very large numbers of small drops. This may be expected to introduce errors due to coalescence and impingement of drops.

Reduction of bias of estimated drop velocity. Table 2 shows that for small numbers of drops the confidence limits of velocity of drops are biassed towards the upper limit, except for the minimum measurable mean position, where the bias is towards the lower limit. This bias is considerably reduced by increasing the number of drops in the sample. Thus, a reduction in bias may be obtained by summing the numbers of drops in each segment for the nine slides, and obtaining thereby larger numbers in the sample. This accounts for the difference between Curves 1 and 2, Figure 7.

Conclusions

The sampling apparatus described in the present note may be used to determine the velocities of drops of different mean diameters comprising a water spray. The accuracy of such velocity determinations increases with the number of drops captured on any one sample tray, (provided that they are not overcrowded), and with the number of samples taken. Where the number of drops of a given size are less than 9, at least thirty samples should be taken to obtain a reasonable estimate of drop velocity. The precision of the estimation is limited by the natural turbulence of the spray cloud.

Acknowledgements

Thanks are due to Miss B. Gay and Mrs. J. Freer, who assisted in the counting and classification of drops in the spray samples, and to D. W. Millar for advice and suggestions on the Statistics.

References

1. D. J. Rasbash and Z. W. Rogowski. F.R. Note No. 58/1953.

2. J. Louis York and H.E. Stubbs. Paper No. 51-A-48. University of Michigan. U.S.A.

3. A. Kolmogoroff. "Sulla determinations empirice di una legge di distributione". Giornalle dell'Instituto Italiano Degli Attuari.

4 G. V. Yule and M. G. Kendall. "An introduction to the theory of statistics". p. 136. 14th Edition. Griffin, London.

5. Corrsin and Uberoi. N.A.C.A. Technical Note No. 1865.

APPENDIX I

The mean position of drops on a sample tray

Consider a spray of randomly dispersed drops, moving with a velocity V, at a large mean density of N drops per unit volume, falling vertically through a fixed volume of unit width, length AB = d and height AD = D h (Figure 9a). It may be noted that, since unit width has been specified, points may represent lines, lines may represent planes, and areas may represent volumes,. Let there be a tray of length D'C' = d, and unit width, rigidly attached to which is a cover A'B', whose leading edge A' is at a height A'D' = h vertically above D'. Let the cover and tray be projected horizontally at a uniform velocity across the volume ABCD. It is assumed that the cover and tray do not disturb the drops in the fixed volume ABCD and come to rest immediately when their leading edges reach A and D. As the tray and cover traverse the volume ABCD from BC to AD, the spray entering ABCD will be progressively cut off by the leading edge of the cover. Thus when the tray and cover reach the position A" D" (Figure 9a), no further spray can enter that part of the volume to the height of the plane A" D", and the spray already cut off will be trapped, and will fall out somewhere on the tray D' C'.

A drop at O in. in the plane A" B", at a vertical height OD" = y above the plane DC will reach the plane DC in time y/V, in which time the tray, whose leading edge was at D" will have moved forward a distance $\ell = y\frac{v}{V}$, so that the drop will be collected in the tray at L", a distance D" L" = ℓ from its leading edge. This relation is general, the displacement of a drop from the leading edge of the tray being related linearly to the height of the drop above the leading edge by the ratio . Thus a drop at A", the maximum height h above the plane DC, will reach the tray at a distance D" F" = $h\frac{v}{V}$ from its leading edge. Moreover, if there are a number of drops, with mean vertical height $\bar{y}$ above the tray when trapped between the cover and tray, they will fall on to the tray with a mean position $\bar{\ell} = \bar{y}\frac{v}{V}$ from the leading edge.

Therefore, after the cover and tray have reached the plane EF, such that AE = DF = D" F" = $h\frac{v}{V}$, no further drops in the plane AB can reach the tray except when it has come to rest. More generally, no drops, trapped between cover and tray which in the plane MN at a height y above the tray, can fall on to the tray while it is moving, when MN = $l = y\frac{v}{V}$. The relation is general and linear, and since when y = o, l = o, a plane DE of slope $\tan\theta = \frac{v}{V}$ may be drawn which divides the volume ABCD into two parts; firstly EBCD, in which trapped drops fall on to the tray while it is in motion, and secondly AED, in which trapped drops fall on to the tray while it is at rest.

The mean position of the drops on the tray D' C' may be found from the mean positions of the drops in the two volumes EBCD and AED.

The volume EBCD may be conveniently divided into parts, EBCF and EFD, for the calculation of the mean position of the drops. It has been shown that trapped drops, at a mean height $\bar{y}$ above the tray D' C', that fall out while the tray is in motion, have a mean position $\bar{\ell} = \bar{y}\frac{v}{V}$ from D'. Thus drops in the volume EBCF will have a mean position $\frac{1}{2}$ EF$\frac{v}{V}$ $= \frac{1}{2}h\frac{v}{V}$ $= \frac{1}{2}$ DF from D and drops in the volume EFD will have a mean position $\frac{1}{3}$ EF $= \frac{1}{3}h\frac{v}{V}$ $= \frac{1}{3}$ DF from D.

The drops trapped in the volume AED fall on to the tray when it is at rest, and the mean position of the drops will be at $\frac{1}{3}$ DF = $\frac{1}{3}h\frac{v}{V}$ from the leading edge D.

Thus, measuring from the leading edge D.

$$N.BC.EB = Nh\left(d - h\frac{v}{V}\right)$$ drops occupy a mean position

$$\tfrac{1}{2}DF = \frac{hv}{2V} \qquad (1)$$

and $N.AE.EF = Nh\left(\frac{hv}{V}\right)$ drops occupy a mean position

$$\tfrac{1}{3}DF = \frac{hv}{3V} \qquad (2)$$

Combining these results, the mean position of all drops caught, $N.HB.BC = Nhd$ is given by

$$\frac{Nh\left[\frac{hv}{2V}\left(d-\frac{hv}{V}\right)+\frac{1}{3}\left(\frac{hv}{V}\right)^2\right]}{Nhd} \qquad (3)$$

$$= \frac{hv}{6V}\left(3-\frac{hv}{dV}\right)$$

This solution applies to values of V such that $AE = DF \leqslant AB$ i.e. $h\frac{v}{V} \leqslant d$. The limiting case is shown in Figure 9b where $h\frac{v}{V} = d$ that is, where the line E on Figure 8a coincides with the line B, the mean position of the drops on the tray thus being $\frac{1}{3}\,h\frac{v}{V} = \frac{1}{3}\,d$ from the leading edge D.

For values of V such that $h\frac{v}{V} \geqslant d$, another solution is obtained. Consider Figure 9c, where ABCD have the same significance as before. There will be a line H in the vertical plane BC such that $HC = h' = \frac{V}{v}d$. Drops trapped in that part HCD of the volume ABCD, will fall on to the tray while it is in motion, and drops trapped in the remaining part will fall on to the tray when it is at rest.

The drops in volume HCD fall on to the tray while it is in motion, and have mean position $\frac{1}{3}d$ from D. The drops in the remaining part of volume ABCD fall on to the tray while it is at rest. Dividing this volume ABHD into the two parts ABHG and HGD, these parts have mean positions of $\frac{1}{2}d$ and $\frac{1}{3}d$ from D respectively. The mean position for all the drops caught in the tray will therefore be, measuring from D

$$\frac{Nd\left[\frac{1}{2}d(h-h')+\frac{1}{3}dh'\right]}{Nhd}$$

$$= \frac{1}{h}\left[\frac{1}{2}d\left(h-\frac{V}{v}d\right)+\frac{1}{3}d\frac{V}{v}d\right]$$

$$= \frac{d}{6}\left(3-\frac{Vd}{vh}\right) \qquad (4)$$

<u>The stepwise distribution of drops on a sample tray</u>

Let the width of the sample tray be divided into x equal parallel segments. Considering the segment bounded by the leading edge of the sample tray, i.e. the first segment the maximum height from which drops of velocity V will fall on to this segment is $KC = LD = \frac{d}{x}\frac{V}{v}$. Thus, drops in volume PKCD will fall on to the segment while the tray is in motion, and drops in the volume PQAD will fall on to the segment while the tray is at rest. It may be seen from Figure 9d that the combined volume from which drops fall on to the first segment, may be considered more conveniently as being composed of volumes LKCD and PQAL, so that the total number of drops falling on to the first segment is given by

$$N(LKCD + PQAL) = N\left[\frac{d}{x}\frac{V}{v}\frac{d}{x} + \frac{d}{x}\left(h-\frac{d}{x}\frac{V}{v}\right)\right]$$

These drops having been removed, the second segment will collect

$$N\frac{d}{x}\left[(x-1)\frac{d}{x}\frac{V}{v} + \left(h - \frac{2d}{x}\frac{V}{v}\right)\right] \qquad \text{drops.}$$

More generally, the number of drops caught in the nth segment of the tray is given by

$$N\frac{d}{x}\left[(x-\overline{n-1})\frac{d}{x}\frac{V}{v} + \left(h - \frac{nd}{x}\frac{V}{v}\right)\right] \tag{5}$$

The proportion q of drops caught in the nth segment is given by

$$q = \frac{N\frac{d}{x}\left[(x-\overline{n-1})\frac{d}{x}\frac{V}{v} + h - \frac{nd}{x}\frac{V}{v}\right]}{Ndh}$$

$$= \frac{1}{xh}\left[(x-\overline{n-1})\frac{d}{x}\frac{V}{v} + h - \frac{nd}{x}\frac{V}{v}\right] \tag{6}$$

It follows that the proportional cumulative sum Q of the drops caught on the first n segments is given by

$$Q = \frac{n}{xh}\left[\left(x - \frac{n-1}{2}\right)\frac{d}{x}\frac{V}{v} + h - \frac{n+1}{2}\frac{d}{x}\frac{V}{v}\right] \tag{7}$$

the value of n being restricted since the sum for all drops caught must be equal to unity, and n cannot be greater than x. It can be seen that equations (6) and (7) are linear equations in the ratio of velocities $\frac{V}{v}$, and will thus be straight lines.

APPENDIX II

THE VELOCITY OF DROPS IN A SPRAY

THE DISTRIBUTION OF DROPS ON A SAMPLE TRAY

RESULTS OF 9 TESTS

Test No.	Mean drop diameter - mm		0.133		0.200		0.267		0.333		0.400		0.467		0.533		0.600	
	Segments		NUMBER OF DROPS															
	No.	Mean position cm	Expt.	Theory	Expt.	Theory	Expt.	Theory	Expt.	Theory	Expt.	Theory	Expt.	Theory	Expt.	Theory	Expt.	Theory
1	1	0.167	57	40.4	48	42.2	23	21.3	10	11.6	3	2.4	3	2.6	1	1		
	2	0.500	26	36.0	32	36.8	17	18.5	15	9.9	2	2.0	1	1.4	0	0		
	3	0.833	28	31.5	37	21.3	14	15.7	3	7.8	1	1.6	0	0	0	0		
	4	1.167	30	27.1	16	25.5	15	12.9	2	0.7	0	0	0	0	0	0		
	5	1.500	17	22.7	3	5.3	1	2.6	0	0	0	0	0	0	0	0		
	6	1.833	10	18.2	4	0	1	0	0	0	0	0	0	0	0	0		
	7	2.167	5	13.7	0	0	0	0	0	0	0	0	0	0	0	0		
	8	2.500	6	2.4	0	0	0	0	0	0	0	0	0	0	0	0		
	9	2.833	3	0	0	0	0	0	0	0	0	0	0	0	0	0		
	10	3.167	7	0	0	0	0	0	0	0	0	0	0	0	0	0		
	11	3.500	3	0	1	0	0	0	0	0	0	0	0	0	0	0		
	12	3.833	0	0	0	0	0	0	0	0	0	0	0	0	0	0		
	Total No. of drops		192	192	141	141	71	71	30	30	6	6	4	4	1	1		
	mean displacement cm		0.960		0.630		0.632		0.467		0.389		0.250		0.167			
	velocity cm/sec		192		320		318		445		545		860		1350			
			19.28		4.48		0.59		4.29									
	probability		0.001		0.1		0.7		0.04									
2	1	0.167	88	117.7	61	68.1	42	38.6	12	11.7	4	4.0	0	0.6	1	1	1	1
	2	0.500	115	104.8	71	59.7	35	33.3	12	10.1	4	3.5	1	0.5	0	0	0	0
	3	0.833	119	92.0	57	50.6	18	28.0	6	8.5	2	2.5	1	0.4	0	0	0	0
	4	1.167	95	78.8	35	41.8	17	12.1	2	2.7	0	0	0	0.3	0	0	0	0
	5	1.500	65	66.2	10	18.8	0	0	1	0	0	0	0	0.1	0	0	0	0
	6	1.833	54	53.1	3	0	0	0	0	0	0	0	0	0	0	0	0	0
	7	2.167	13	40.0	1	0	0	0	0	0	0	0	0	0	0	0	0	0
	8	2.500	2	6.4	0	0	0	0	0	0	0	0	0	0	0	0	0	0
	9	2.833	4	0	0	0	0	0	0	0	0	0	0	0	0	0	0	0
	10	3.167	1	0	0	0	0	0	0	0	0	0	0	0	0	0	0	0
	11	3.500	2	0	0	0	0	0	0	0	0	0	0	0	0	0	0	0
	12	3.833	1	0	1	0	0	0	0	0	0	0	0	0	0	0	0	0
	Total No. of drops		559	559	239	239	112	112	33	33	10	10	2	2	1	1	1	1
	mean displacement cm		0.960		0.671		0.530		0.511		0.433		0.667		0.167		0.167	
	velocity cm/sec		192		296		390		405		481		295		1350		1350	
			39.23		5.36		5.96		0.80									
	probability		0.001		0.15		0.05		0.4									
3	1	0.167	112	126.3	41	38.3	7	9.9	4	4.2	1	2.7	0	0.9	1	1		
	2	0.500	124	112.9	35	33.6	10	8.6	4	3.6	4	2.3	2	0.8	0	0		
	3	0.833	117	99.4	26	28.7	10	7.4	3	3.0	4	2.0	1	0.7	0	0		
	4	1.167	108	86.0	21	23.7	8	6.1	2	2.2	0	1.6	0	0.5	0	0		
	5	1.500	45	72.6	10	15.7	0	3.0	0	0	0	0.4	0	0.1	0	0		
	6	1.833	36	59.2	3	0	0	0	0	0	0	0	0	0	0	0		
	7	2.167	27	45.8	1	0	0	0	0	0	0	0	0	0	0	0		
	8	2.500	15	7.8	0	0	0	0	0	0	0	0	0	0	0	0		
	9	2.833	9	0	1	0	0	0	0	0	0	0	0	0	0	0		
	10	3.167	4	0	0	0	0	0	0	0	0	0	0	0	0	0		
	11	3.500	8	0	0	0	0	0	0	0	0	0	0	0	0	0		
	12	3.833	5	0	0	0	0	0	0	0	0	0	0	0	0	0		
	Total No. of drops		610	610	138	138	35	35	13	13	9	9	3	3	1	1		
	mean displacement cm		1.015		0.695		0.680		0.577		0.611		0.611		0.167			
	velocity cm/sec		180		285		292		355		330		330		1350			
			36.2		0.93		2.12											
	probability		0.001		0.8		0.4											

A value of probability greater than 0·05 indicates that there is no significant difference between the experimental and theoretical distributions.

TA/23

APPENDIX II (CONTD.)

Test No.	Mean drop diameter - mm		0.133		0.200		0.267		0.333		0.400		0.467		0.533		0.600	
	Segments		NUMBER OF DROPS															
	No.	Mean position cm	Expt.	Theory	Expt.	Theory	Expt.	Theory	Expt.	Theory	Expt.	Theory	Expt.	Theory	Expt.	Theory	Expt.	Theory
4	1	0.167	67	68.3	39	48.4	20	25.3	6	7.0	2	2.7	0	0.7				
	2	0.500	64	61.3	43	42.6	28	22.0	7	6.1	4	2.3	2	0.6				
	3	0.833	62	53.6	59	36.4	24	19.0	7	5.1	1	2.0	0	0.5				
	4	1.167	50	46.2	30	30.7	6	11.7	1	2.8	0	0	0	0.2				
	5	1.500	40	39.2	8	24.6	0	0	0	0	0	0	0	0				
	6	1.833	21	31.5	4	3.3	0	0	0	0	0	0	0	0				
	7	2.167	15	24.1	0	0	0	0	0	0	0	0	0	0				
	8	2.500	4	10.8	2	0	0	0	0	0	0	0	0	0				
	9	2.833	3	0	1	0	0	0	0	0	0	0	0	0				
	10	3.167	5	0	0	0	0	0	0	0	0	0	0	0				
	11	3.500	2	0	0	0	0	0	0	0	0	0	0	0				
	12	3.833	2	0	0	0	0	0	0	0	0	0	0	0				
	Total No. of drops		335	335	186	186	78	78	21	21	7	7	2	2				
	mean displacement cm		0.997		0.750		0.569		0.546		0.453		0.500					
	velocity cm/sec		184		259		360		375		465		415					
			11.45		21.79		6.85											
∴	probability		0.1		0.001		0.04											
5	1	0.167	158	125.0	30	24.4	25	16.6	12	9.2	9	6.9	1	1.8	3	3	1	0.7
	2	0.500	113	112.6	21	21.6	9	14.6	5	8.0	2	5.8	3	1.6	0	0	0	0.6
	3	0.833	96	100.4	17	18.7	9	12.4	7	6.8	2	0.3	1	1.4	0	0	1	0.5
	4	1.167	89	87.6	9	15.6	8	10.2	3	5.0	0	0	1	1.2	0	0	0	0.2
	5	1.500	64	75.3	9	12.8	4	5.2	2	0	0	0	0	1.0	0	0	0	0
	6	1.833	35	62.5	5	7.9	2	0	0	0	0	0	2	0.8	0	0	0	0
	7	2.167	32	50.3	2	0	0	0	0	0	0	0	0	0.2	0	0	0	0
	8	2.500	26	38.0	2	0	2	0	0	0	0	0	0	0	0	0	0	0
	9	2.833	27	25.1	3	0	0	0	0	0	0	0	0	0	0	0	0	0
	10	3.167	24	2.2	3	0	0	0	0	0	0	0	0	0	0	0	0	0
	11	3.500	7	0	0	0	0	0	0	0	0	0	0	0	0	0	0	0
	12	3.833	8	0	0	0	0	0	0	0	0	0	0	0	0	0	0	0
	Total No. of drops		679	679	101	101	59	59	29	29	13	13	8	8	3	3	2	2
	mean displacement cm		1.133		0.820		0.680		0.583		0.321		0.917		0.167		0.500	
	velocity cm/sec		150		234		292		350		665		205		1350		415	
			14.54		5.19		7.34		1.99									
∴	probability		0.01		0.15		0.03		0.20									
6	1	0.167	66	57.5	18	13.1	11	7.1	6	5.4	4	3.6					1	1
	2	0.500	71	51.0	14	11.6	5	6.1	4	4.6	2	2.4					0	0
	3	0.833	45	44.5	8	10.1	4	5.2	2	2.0	0	0					0	0
	4	1.167	29	37.8	6	8.5	1	3.6	0	0	0	0					0	0
	5	1.500	11	31.3	2	6.9	0	0	0	0	0	0					0	0
	6	1.833	9	24.9	1	4.8	0	0	0	0	0	0					0	0
	7	2.167	5	12.0	1	0	0	0	0	0	0	0					0	0
	8	2.500	5	0	1	0	0	0	0	0	0	0					0	0
	9	2.833	5	0	2	0	0	0	0	0	0	0					0	0
	10	3.167	3	0	1	0	0	0	0	0	0	0					0	0
	11	3.500	6	0	0	0	0	0	0	0	0	0					0	0
	12	3.833	4	0	1	0	1	0	0	0	0	0					0	0
	Total No. of drops		259	259	55	55	22	22	12	12	6	6					1	1
	mean displacement cm		0.904		0.833		0.577		0.389		0.278						0.167	
	velocity cm/sec		208		230		355		545		770						1350	
			50.88		4.14		3.27											
∴	probability		0.001		0.3		0.07											

∴ A value of probability greater than 0·05 indicates that there is no significant difference between the experimental and theoretical distributions.

TA/25

APPENDIX II (CONTD.)

Test No.	Mean drop diameter - mm		0.133		0.200		0.267		0.333		0.400		0.467		0.533		0.600	
	Segments		NUMBER OF DROPS															
	No.	Mean position cm	Expt.	Theory	Expt.	Theory	Expt.	Theory	Expt.	Theory	Expt.	Theory	Expt.	Theory	Expt.	Theory	Expt.	Theory
7	1	0·167	42	36.4	46	35.9	10	12.8	13	11.2	2	3.8	0	1.7	2	1.8	1	1
	2	0·500	33	33.5	22	32.3	14	11.3	9	9.7	6	3.3	4	1.5	1	1.2	0	0
	3	0·833	34	30.3	26	28.7	11	9.8	7	8.2	3	2.8	1	1.3	0	0	0	0
	4	1·167	24	26.9	31	24.9	8	8.4	4	4.9	1	2.1	1	1.0	0	0	0	0
	5	1·500	30	23.9	24	21.3	8	7.0	0	0	0	0	0	0.5	0	0	0	0
	6	1·833	14	20.5	20	17.7	3	5.5	1	0	0	0	0	0	0	0	0	0
	7	2·167	16	17.3	6	14.1	2	2.2	0	0	0	0	0	0	0	0	0	0
	8	2·500	6	14.1	4	10.3	1	0	0	0	0	0	0	0	0	0	0	0
	9	2·833	5	10.9	2	4.8	0	0	0	0	0	0	0	0	0	0	0	0
	10	3·167	6	7.8	3	0	0	0	0	0	0	0	0	0	0	0	0	0
	11	3·500	6	4.3	3	0	0	0	0	0	0	0	0	0	0	0	0	0
	12	3·833	12	2.1	3	0	0	0	0	0	0	0	0	0	0	0	0	0
	Total No. of drops		228	228	190	190	57	57	34	34	12	12	6	6	3	3	1	1
	mean displacement cm		1.317		1.100		0.903		0.559		0.584		0.667		0.228		0.167	
	velocity cm/sec		115		160		208		367		350		300		770		1350	
			19.74		13.19		1.95		0.34									
·X·	probability		0.01		0.04		0.7		0.6									
8	1	0·167	87	55.6	35	40.7	37	40.8	15	15.7	3	4.0	1	3.1	0	0.4		
	2	0·500	41	50.5	47	36.3	37	36.0	15	13.7	6	3.5	1	1.9	1	0.3		
	3	0·833	39	45.2	39	31.7	33	30.9	15	11.6	1	2.5	1	0	0	0.2		
	4	1·167	29	39.8	27	27.2	37	25.8	6	9.5	0	0	2	0	0	0.1		
	5	1·500	36	34.4	18	22.6	10	20.8	1	1.5	0	0	0	0	0	0		
	6	1·833	16	29.1	8	18.0	3	5.7	0	0	0	0	0	0	0	0		
	7	2·167	16	23.7	5	13.5	3	0	0	0	0	0	0	0	0	0		
	8	2·500	12	18.3	1	0	0	0	0	0	0	0	0	0	0	0		
	9	2·833	17	12.9	2	0	0	0	0	0	0	0	0	0	0	0		
	10	3·167	11	6.5	5	0	0	0	0	0	0	0	0	0	0	0		
	11	3·500	6	0	1	0	0	0	0	0	0	0	0	0	0	0		
	12	3·833	0	0	0	0	0	0	0	0	0	0	0	0	0	0		
	Total No. of drops		316	316	190	190	160	160	52	52	10	10	5	5	1	1		
	mean displacement cm		1.191		0.952		0.767		0.596		0.433		0.767		0.500			
	velocity cm/sec		140		195		252		342		485		252		415			
			39.78		12.58		10.92		2.59									
·X·	probability		0.001		0.03		0.02		0.3									
9	1	0·167	91	100.8	36	30.2	12	12.2	9	6.8	4	3.5	2	1.6				
	2	0·500	100	89.3	24	26.7	10	10.8	8	6.0	3	3.0	1	1.2				
	3	0·833	92	77.9	24	22.9	10	9.2	3	5.1	1	2.5	0	0				
	4	1·167	80	66.4	15	19.2	7	7.7	1	4.2	1	0	0	0				
	5	1·500	31	55.0	10	15.5	8	6.2	1	0.9	0	0	0	0				
	6	1·833	20	43.6	4	4.5	0	0.9	0	0	0	0	0	0				
	7	2·167	12	7.0	4	0	0	0	0	0	0	0	0	0				
	8	2·500	4	0	1	0	0	0	0	0	0	0	0	0				
	9	2·833	2	0	1	0	0	0	0	0	0	0	0	0				
	10	3·167	2	0	0	0	0	0	0	0	0	0	0	0				
	11	3·500	3	0	0	0	0	0	0	0	0	0	0	0				
	12	3·833	3	0	0	0	0	0	0	0	0	0	0	0				
	Total No. of drops		440	440	119	119	47	47	23	23	9	9	3	3				
	mean displacement cm		0.880		0.771		0.745		0.630		0.463		0.284					
	velocity cm/sec		215		252		262		319		450		750					
			18.61		2.36		0.22		3.09									
·X·	probability		<·001		0.5		0.96		0.08									

·X· A value of probability greater than 0.05 indicates that there is no significant difference between the experimental and theoretical distributions.

Appendix III

Determination of the distribution of drops on the sample tray by geometrical construction

For any given set of conditions the expected distribution of drops on the sample tray may be determined by a simple geometrical construction. In Figure 10a such a construction is given for the case when the drops are falling at an angle of 20° to the vertical in a direction opposite to the motion of the tray and with a velocity equal to the velocity of the tray. The fixed volume is represented by ABCD and the sample tray and cover by A' B' C' D'. The drops entering the fixed volume must be contained by the parallel planes XAX_1, and YBY_1, such that the angle DAX, is 20°. All drops initially present above a certain plane A_1MN will be cut off progressively by the cover as this moves across the volume. The position of this plane is such that the ratio BM to BA_1 equals the ratio of the velocity of the drops to that of the cover (unity in this case). Similarly all drops below a plane D_1PO, parallel to A_1MN will fall out before the tray passes. Therefore the drops in the volume of spray represented by NMPO will be caught between the tray and the cover. A line EF parallel to AB may also be constructed such that the drops in the volume NEF will not fall out until after the tray has come to rest. The point E is fixed by making the ratio EO to DX_1 equal to the ratio of the velocity, of the drops to that of the tray (unity in this case). The distribution of the drops in segments 1 to 12 of the tray will then be represented by the areas shown. Segments 1 to 3 will catch drops only while the tray is moving but the other segments will catch drops also after the tray has come to rest. The drops in the small shaded portion will not be caught in any of the 12 segments and will "overshoot" the slide.

Similar constructions have been given for the drops moving at an angle of 20° in the direction of motion of the slide (Figure 10b) and for drops moving vertically (Figure 10c). By inserting lines RQ and ST on F igure 10c the distribution of drops on the slide may be obtained for sprays falling through only the central $\frac{1}{3}$ portion of the volume, and for only the outside $^2/_3$ portion of the volume.

ERH

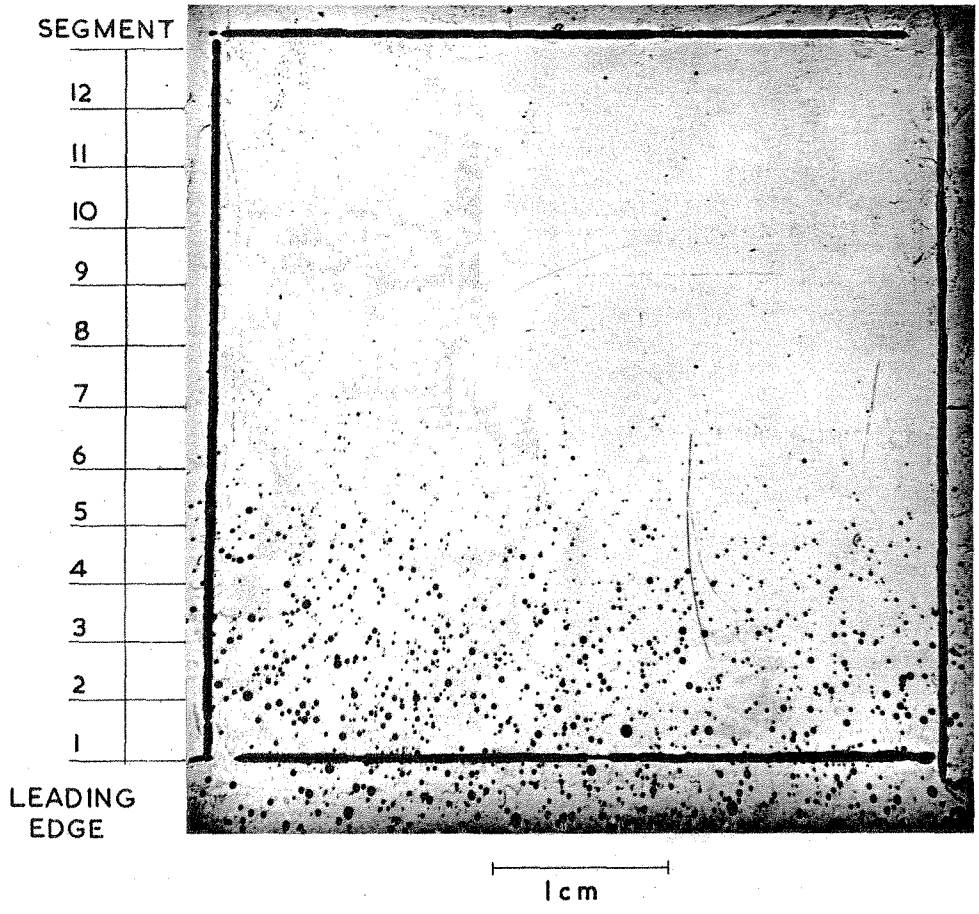

PLATE. 1 DISTRIBUTION OF DROPS CAPTURED ON A SAMPLE TRAY

DS 97656/11/151 60 10/55 CL

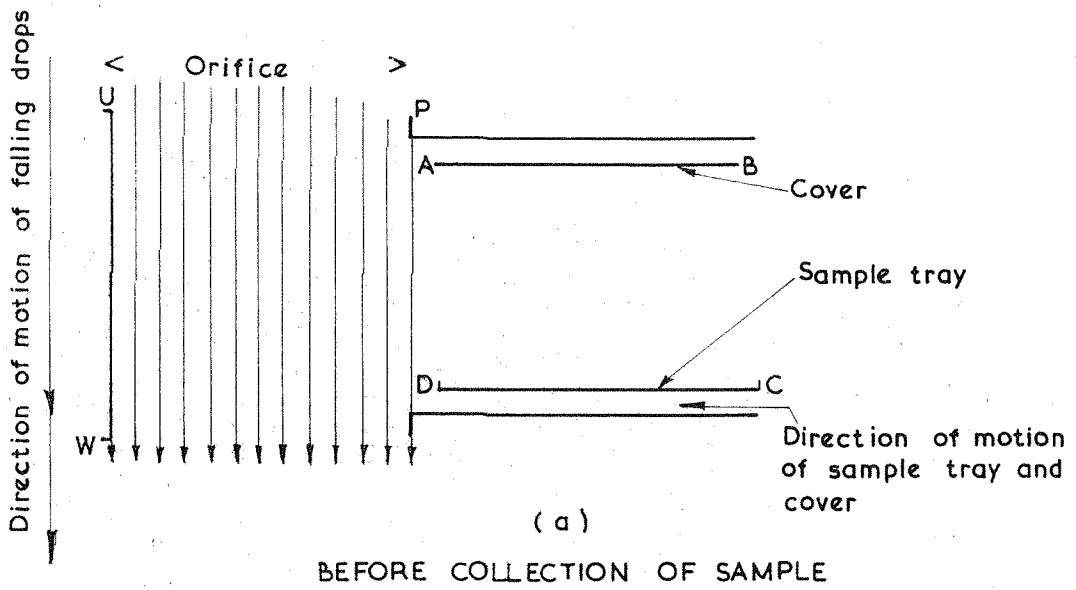

(a)

BEFORE COLLECTION OF SAMPLE

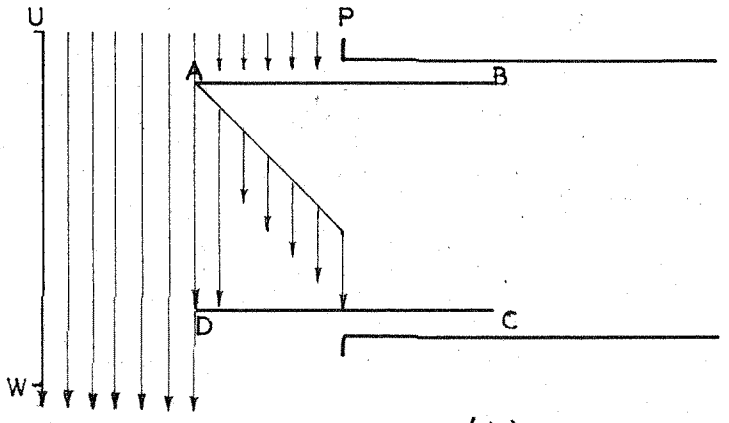

(b)

SAMPLE TRAY HALF WAY ACROSS ORIFICE

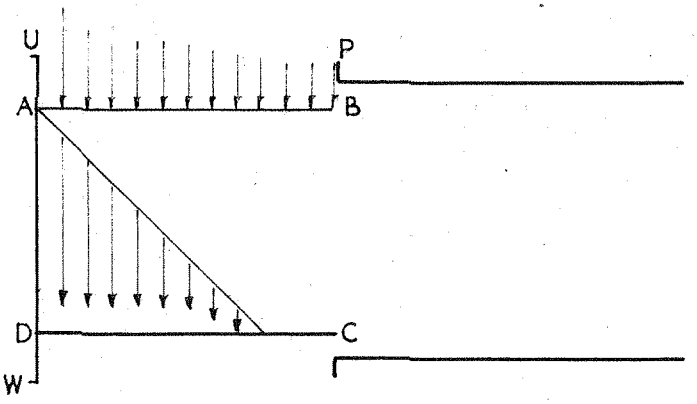

(c)

SAMPLE TRAY AT INSTANT OF COMING TO REST AGAINST WALL

NOTE.
VELOCITY OF FALLING DROPS V TAKEN AS THE SAME AS VELOCITY OF TRAVERSE OF SAMPLE TRAY U

FIG. 1. PRINCIPLE OF APPARATUS FOR MEASURING DROP VELOCITY

F.R. 175 1/1944

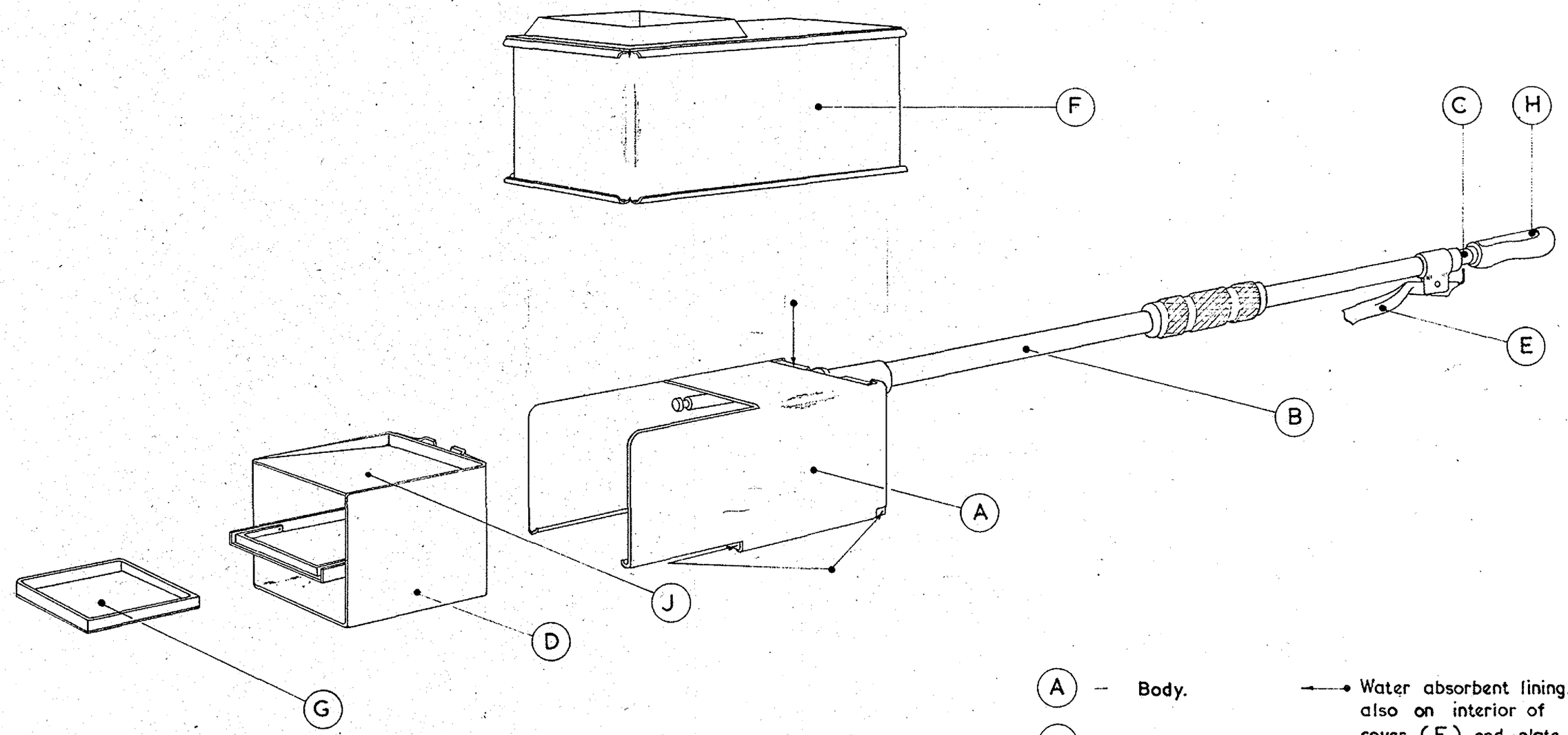

FIG.2. EXPLODED VIEW OF DROP SAMPLING APPARATUS.

(A) – Body. ⟵ Water absorbent lining, also on interior of cover (F) end-plate.

(B) – Tubular Sleeve.

(C) – Operating Rod.

(D) – Sample Tray Holder.

(E) – Trigger.

(F) – Cover.

(G) – Sample Tray.

(H) – Wooden Handle.

(J) – Sample Tray Cover.

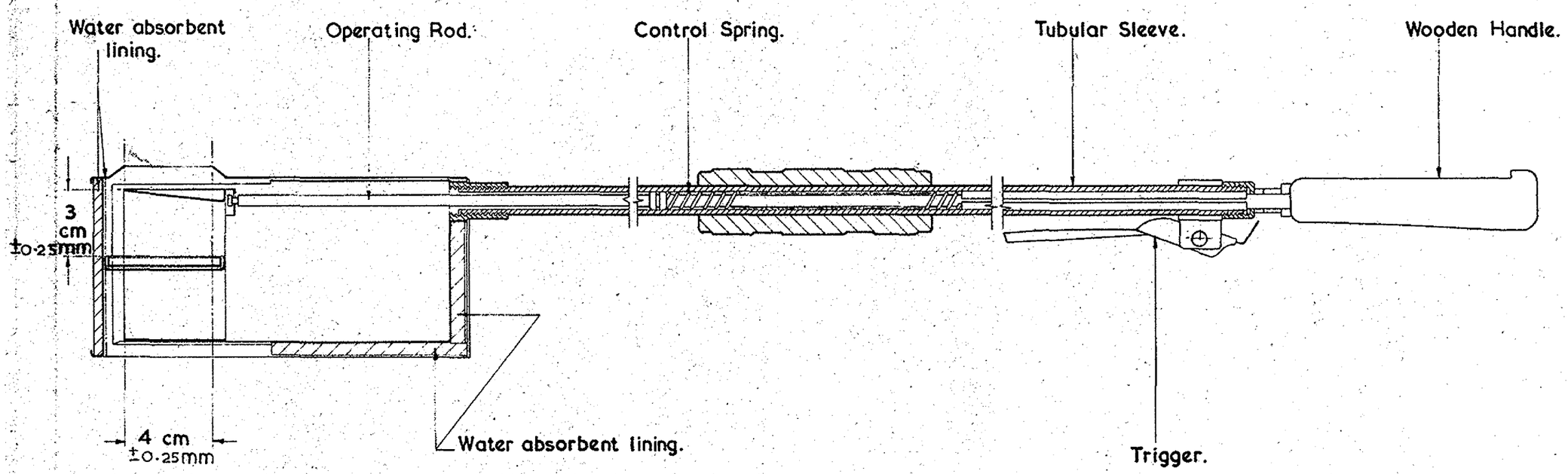

SAMPLE TRAY PROJECTED FOREWARD

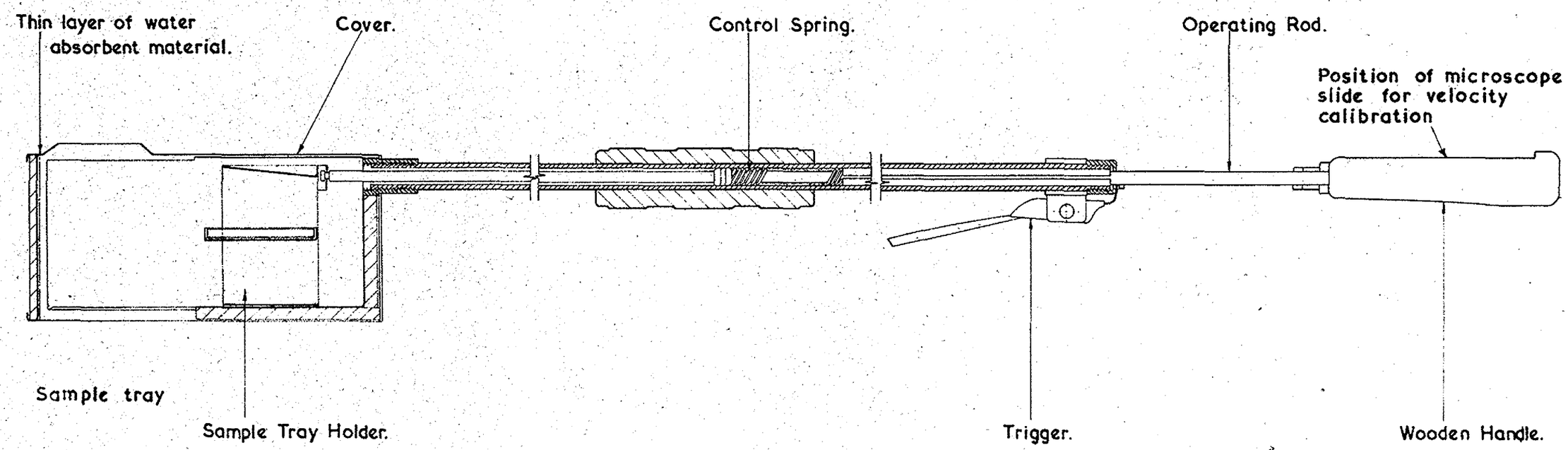

SAMPLE TRAY HELD BACK

FIG. 3. DROP SAMPLING APPARATUS.

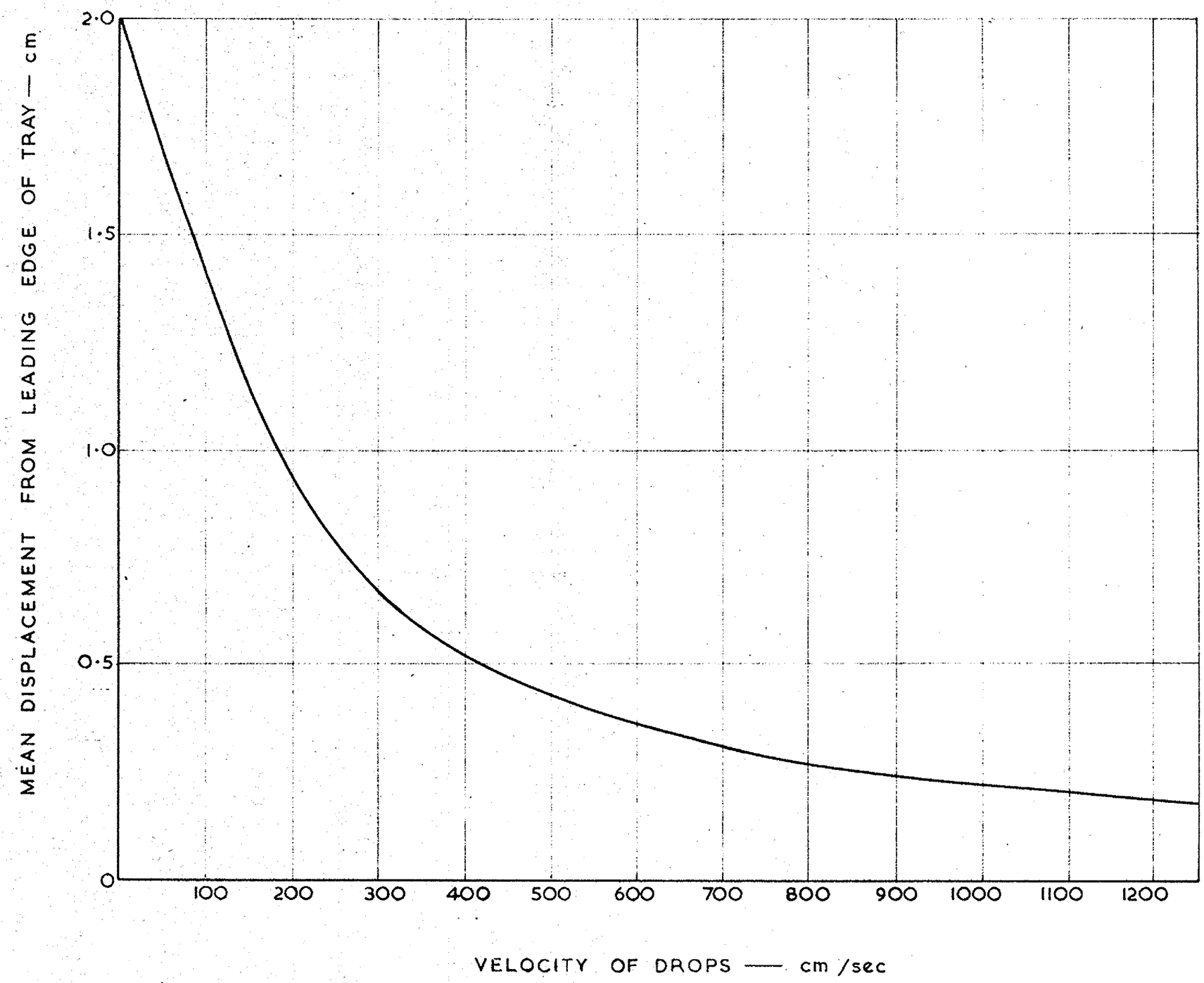

FIG.4. RELATION BETWEEN MEAN DISPLACEMENT AND VELOCITY OF DROPS

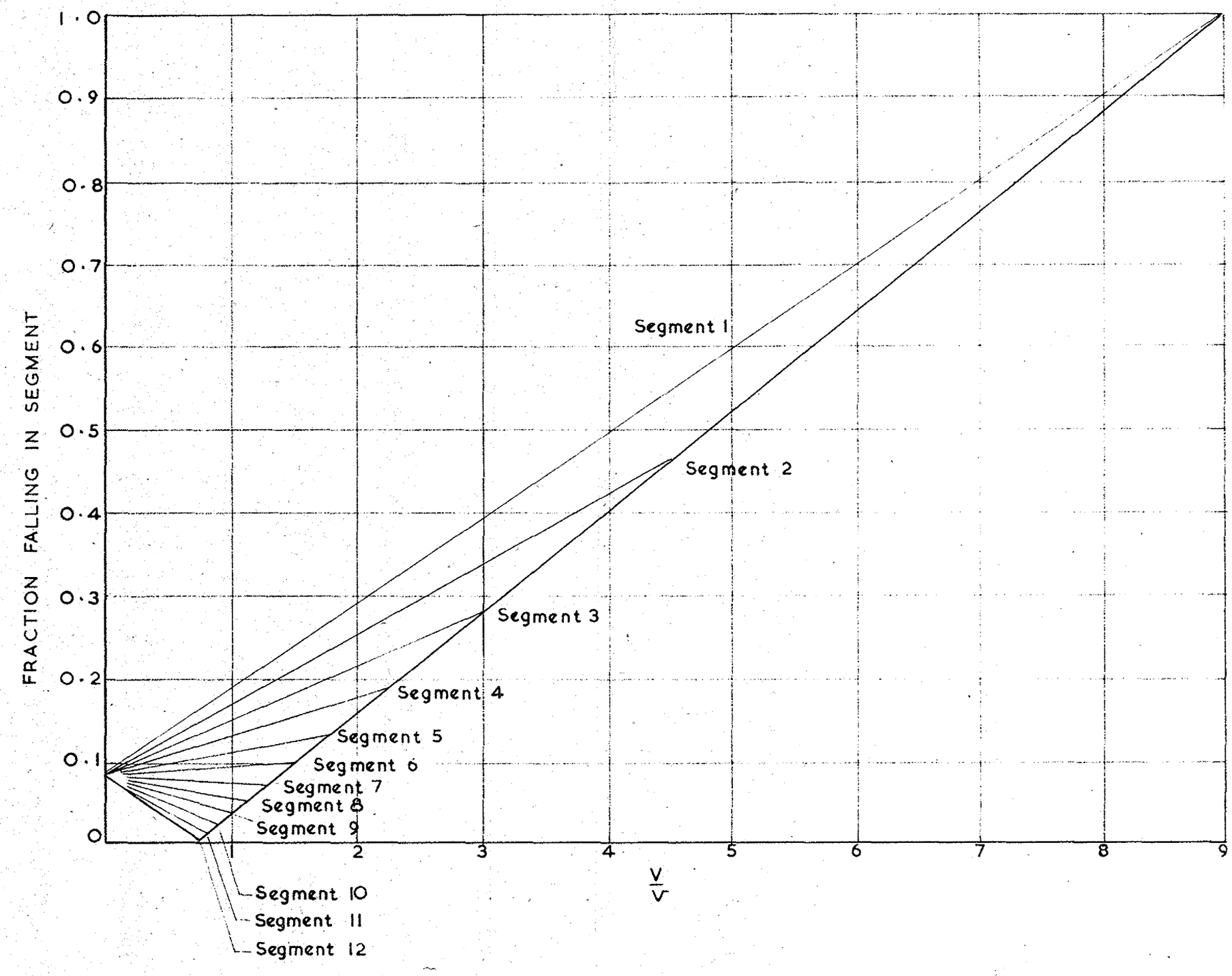

FIG.5. RELATION BETWEEN STEPWISE DISTRIBUTION AND VELOCITY OF DROPS

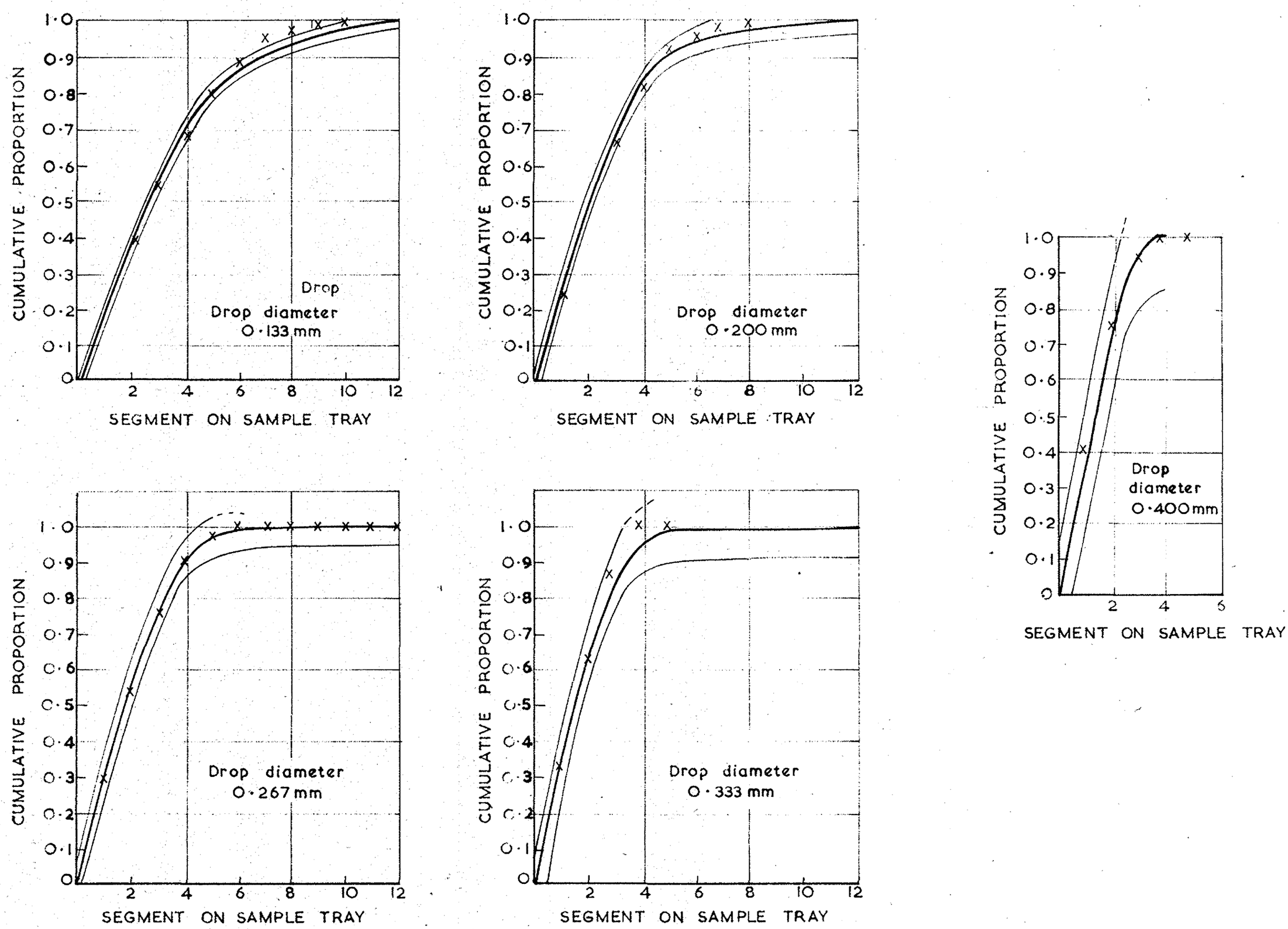

X Theoretical distribution
Centre thick line is experimental distribution
Outer thin lines are 95% confidence limits of experimental distribution

FIG.6. CUMULATIVE DISTRIBUTION OF DROPS IN SAMPLES OF SPRAY (WITH 95% LIMITS) SUMMED RESULTS OF 9 TESTS

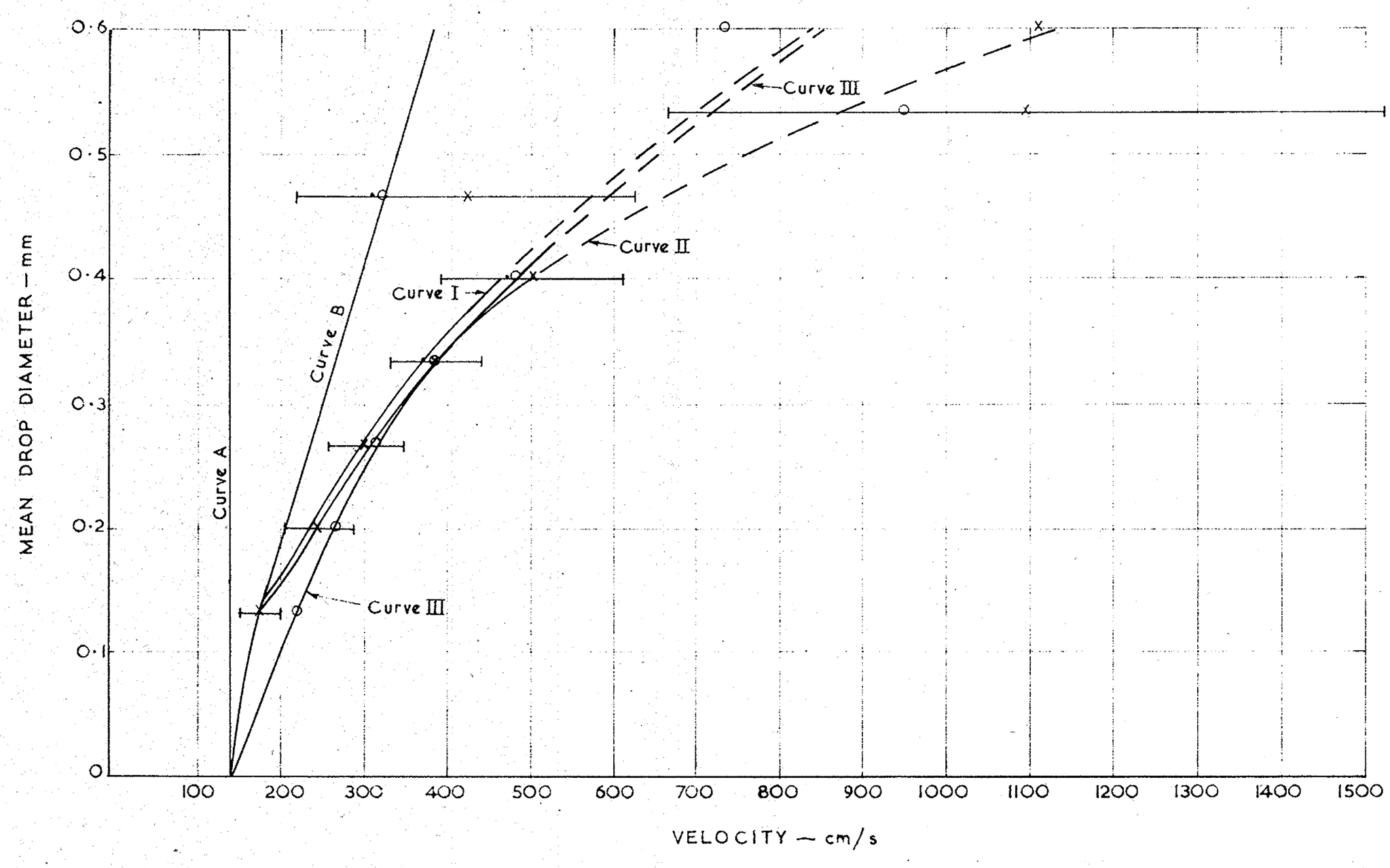

Curve A = Entrained air velocity

Curve B = Terminal velocity of drops + entrained air velocity

Curve I = Mean curve, sum of 9 samples, of velocity of drops in spray —— • ——

Curve II = Curve, mean of 9 determinations, of velocity of drops in spray —— x ——

Curve III = Curve I, corrected for deceleration in sampling apparatus —— o ——

95 per cent confidence limits curve II ⊢—x—⊣

FIG.7. THE VELOCITY OF DROPS IN A SPRAY

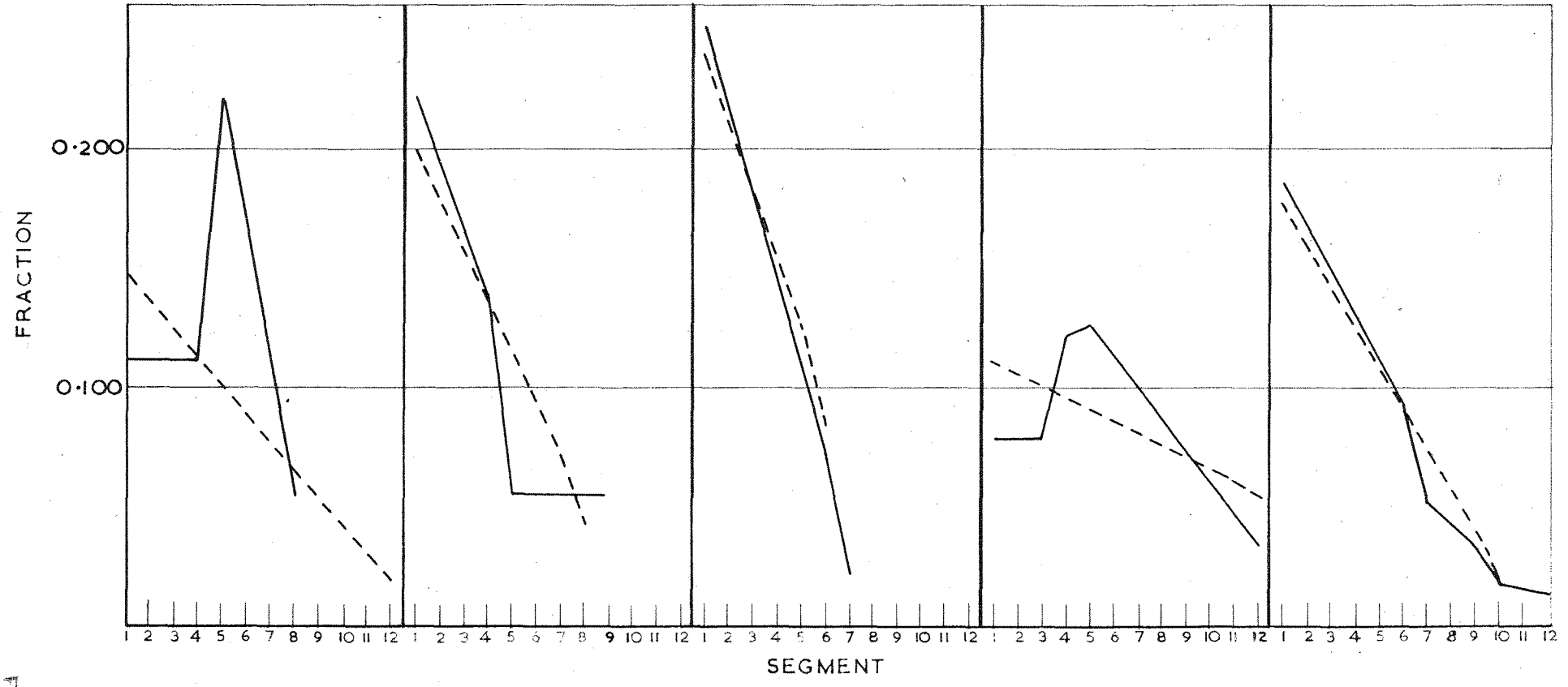

1. Drops falling through only central $\frac{1}{3}$ portion of volume
2. Drops falling through outside $\frac{2}{3}$ portion of volume
3. Drops falling at 20° to vertical in direction of motion of tray
4. Drops falling at 20° to vertical opposite to direction of motion of tray
5. One third of drops each fall at velocities of 0·5, 1·0 and 1·5 times the mean velocity

— — — — — — Distribution expected from equivalent vertical velocity
——————— Actual distribution

FIG. 8. DISTRIBUTIONS OBTAINED ON SAMPLING TRAY WHEN SPRAY FALLS THROUGH FIXED VOLUME IN DIFFERENT WAYS

F.R.A.E. 1/1445

DIRECTION OF TRAVERSE OF COVER AND TRAY AT UNIFORM VELOCITY $\mathcal{V}$

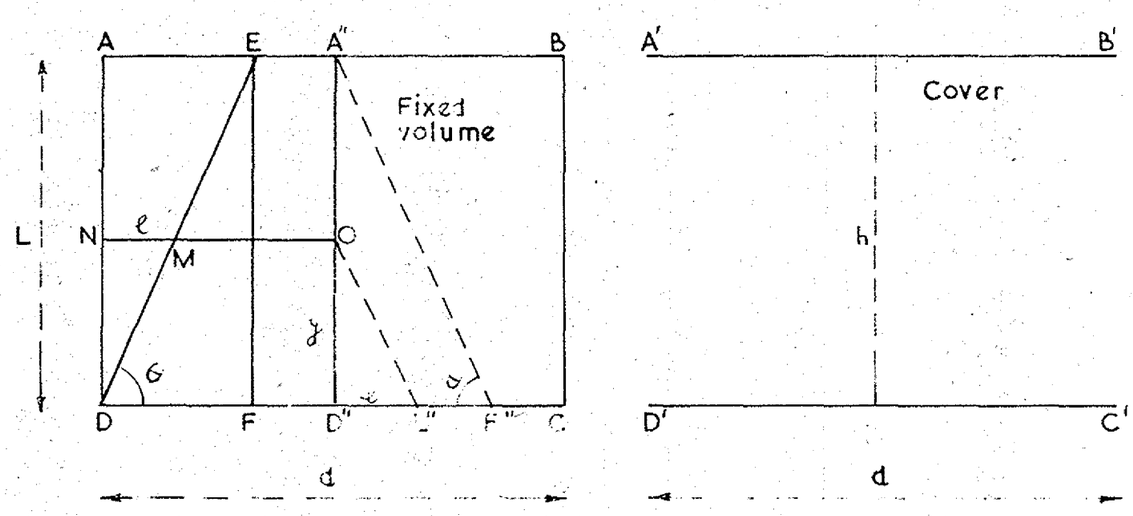

$\frac{\mathcal{V}}{v} h < d$

FIG. 9a.

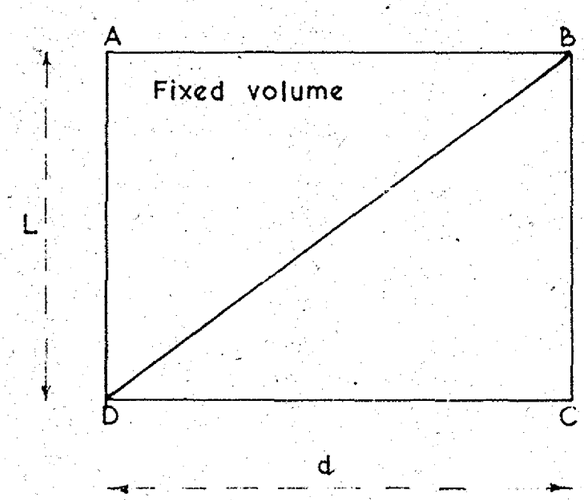

$\frac{\mathcal{V}}{v} h = d$

FIG. 9b.

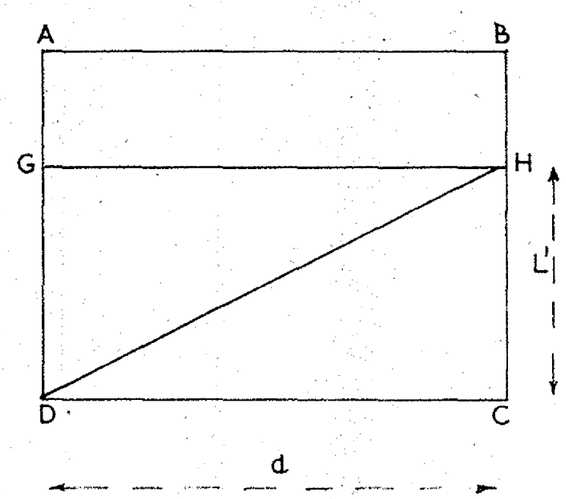

$\frac{\mathcal{V}}{v} h > d$

FIG. 9c.

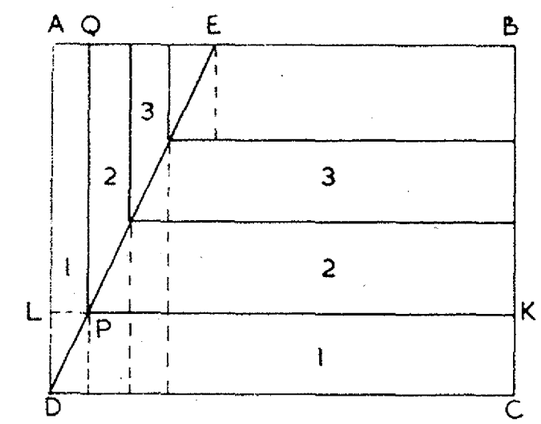

FIG 9d

STEPWISE DISTRIBUTION OF DROPS

FIG. 9. THE MEAN POSITION AND DISTRIBUTION OF DROPS ON A SAMPLE TRAY

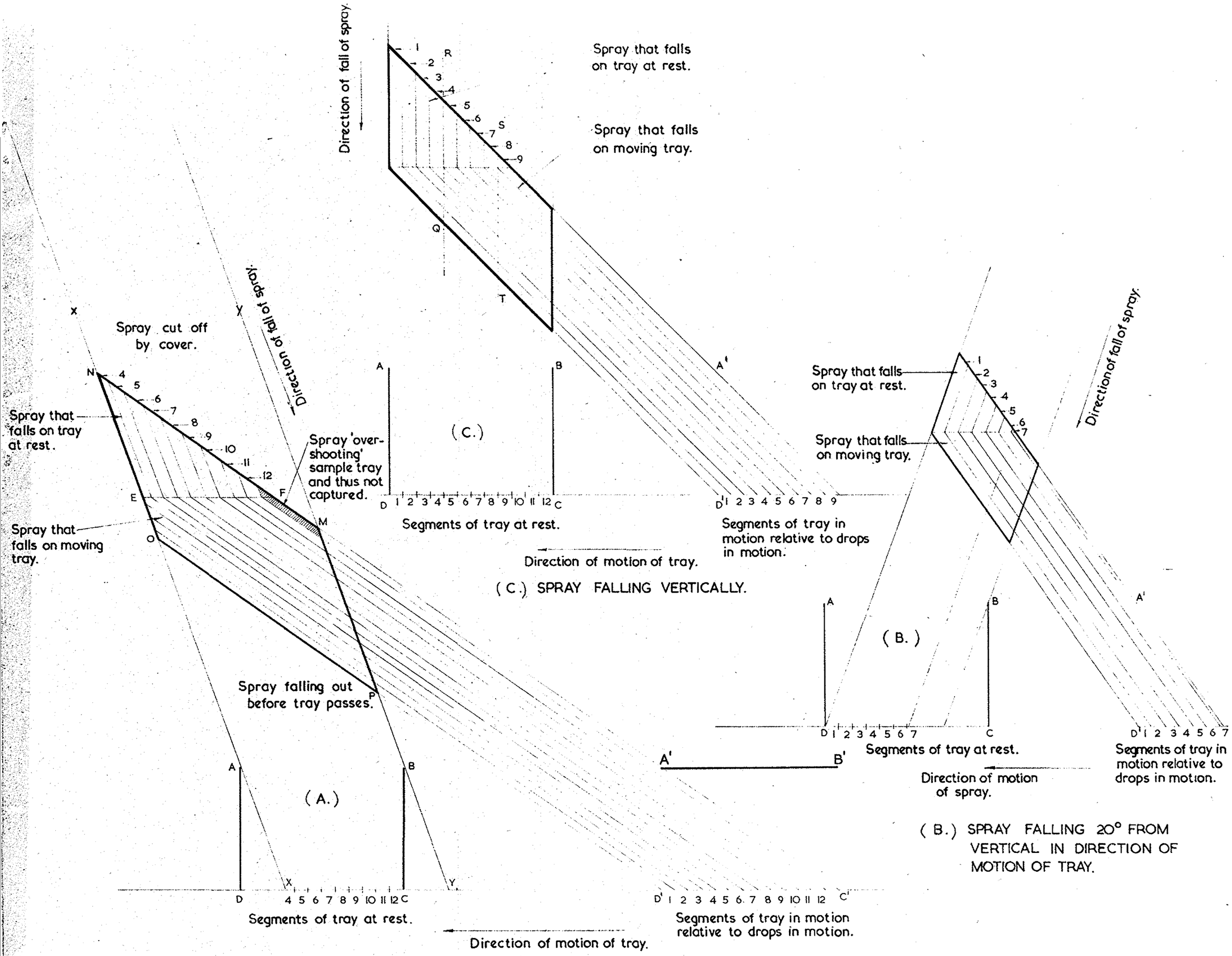

FIG. 10. GEOMETRIC CONSTRUCTIONS OF DIRECTION OF APPROACH OF SPRAY TO SAMPLE TRAY, AND OF DISTRIBUTION OF DROPS ON SEGMENTS OF SAMPLE TRAY. VELOCITY OF DROPS EQUAL TO VELOCITY OF TRAVERSE OF TRAY.